厦华 MT34F1A 数字高清彩电电路原理图

TV160 彩电维修资料网
http://www.tv160.net

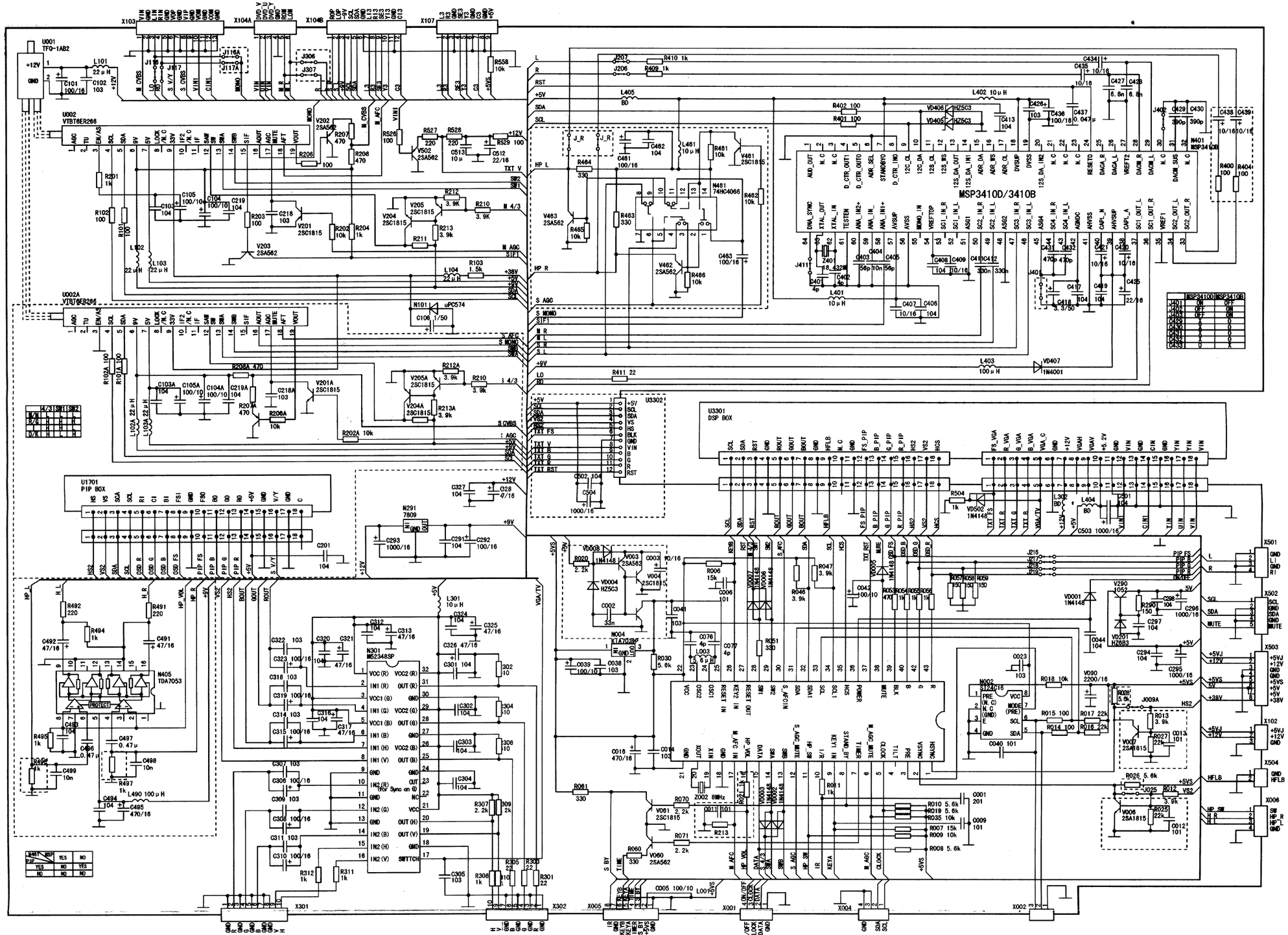

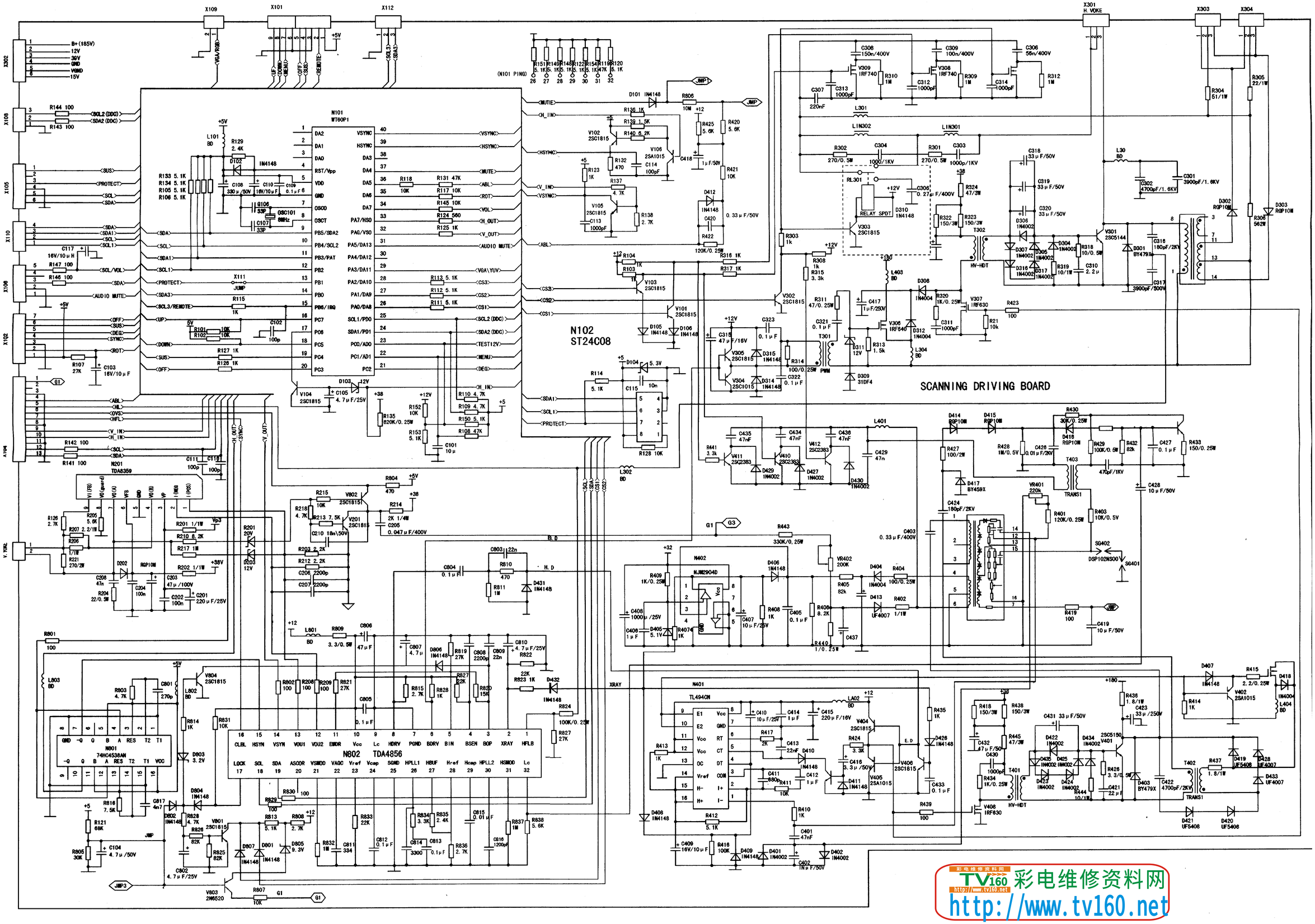

彩电维修资料网
TV160
http://www.tv160.net

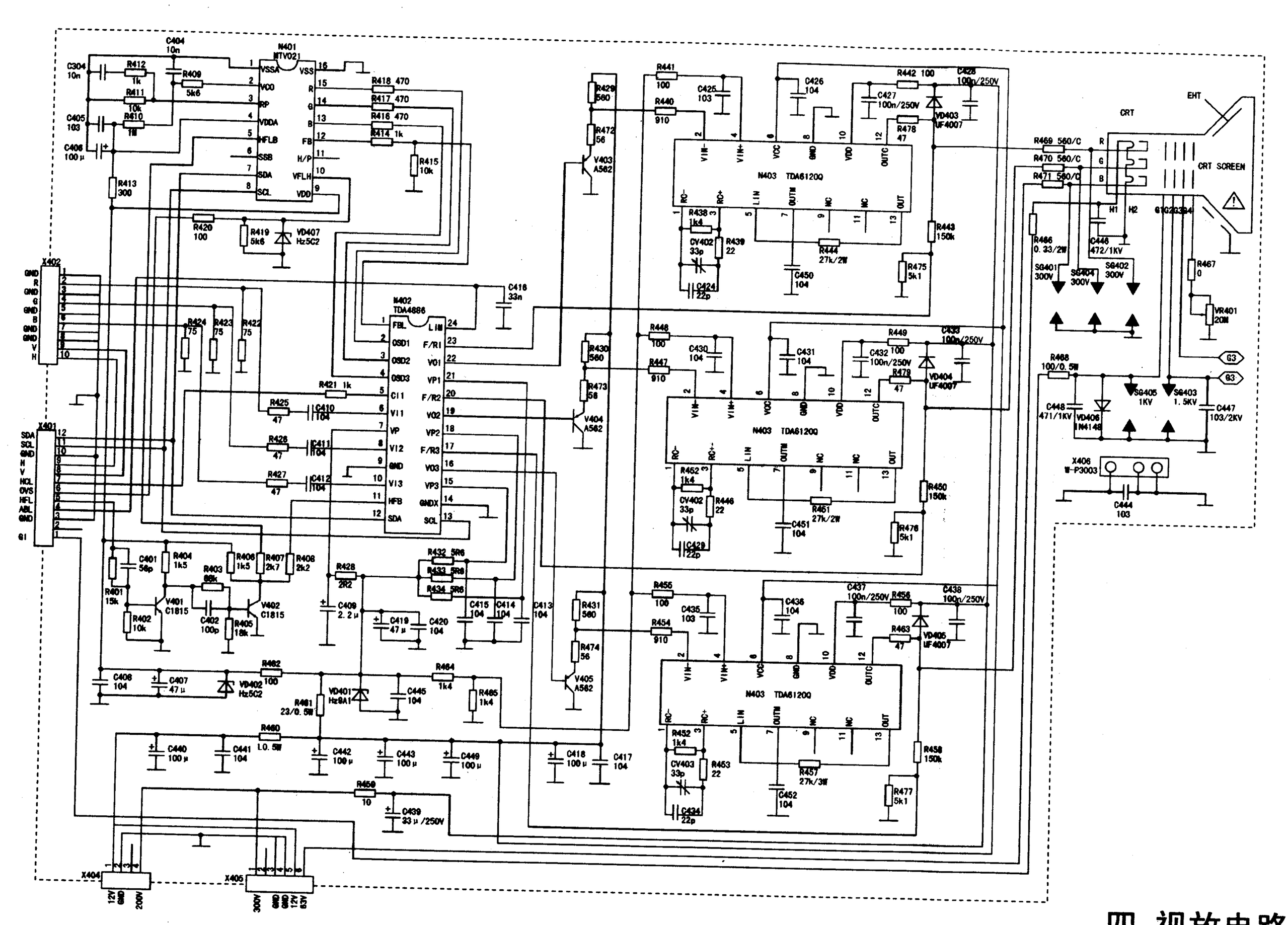
N401 MTV021
N402 TDA4886
N403 TDA6120Q
N403 TDA6120Q
N403 TDA6120Q
N403 TDA6120Q
X401
X402
X404
X405
X406 W-P3003
CRT
CRT SCREEN
EHT
G1
G2
G3
H1
H2
SDA
SCL
GND
H
V
HCL
OVS
HFL
ABL
R
G
B
12V
GND
200V
300V
GND
GND
12V
63V

四 视放电路

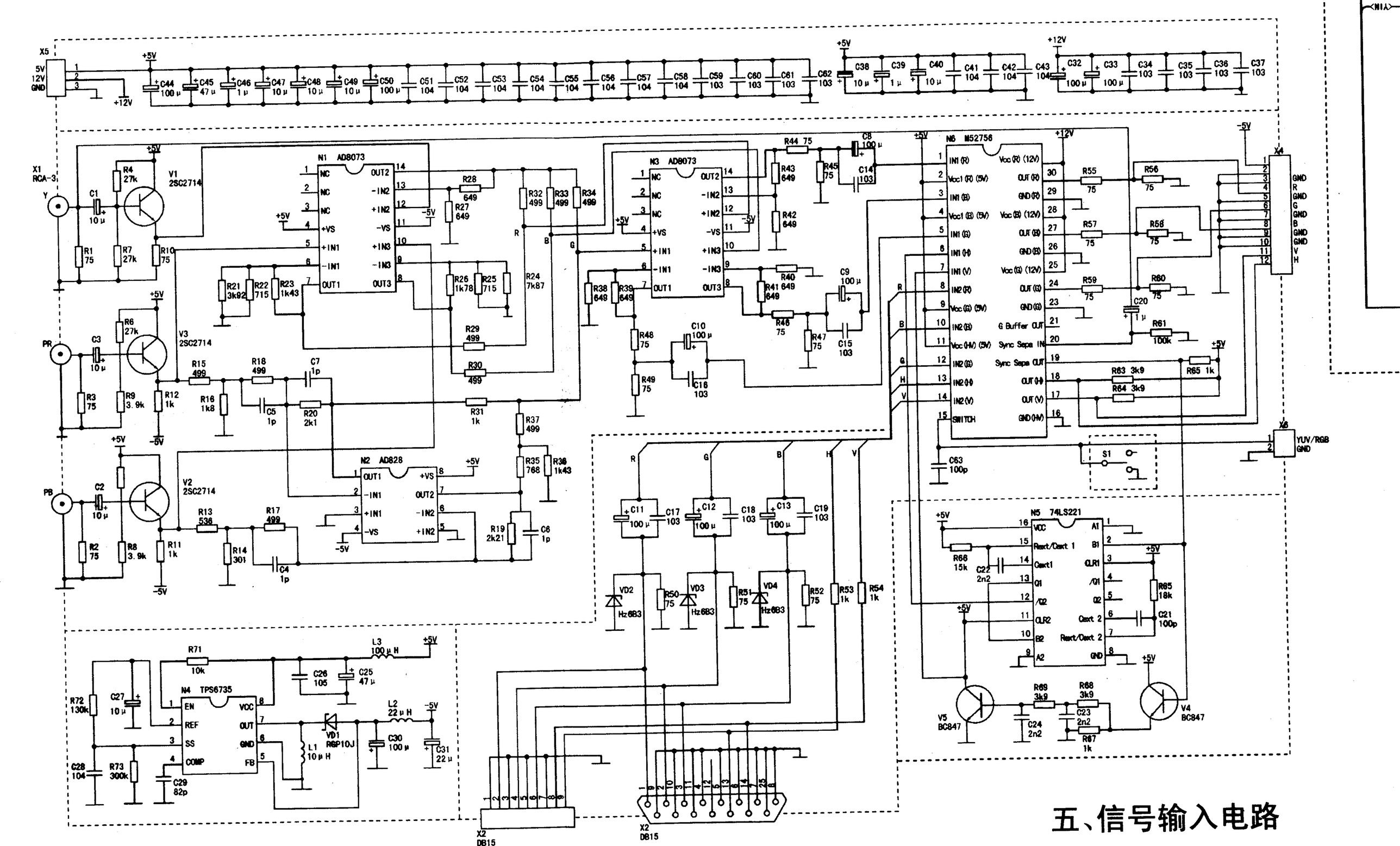
X5
5V
12V
GND
+5V
+12V
C44 100μ
C45 47μ
C46 1μ
C47 10μ
C48 10μ
C49 10μ
C50 100μ
C51 104
C52 104
C53 104
C54 104
C55 104
C56 104
C57 104
C58 104
C59 103
C60 103
C61 103
C62 103
C38 10μ
C39 1μ
C40 10μ
C41 104
C42 104
C43 104
C32 100μ
C33 100μ
C34 103
C35 103
C36 103
C37 103
X1
RCA-3
Y
C1 10μ
R4 27k
V1 2SC2714
R1 75
R7 27k
R10 75
N1 AD8073
NC
+VS
+IN1
-IN1
OUT1
OUT2
-IN2
+IN2
-VS
+IN3
-IN3
OUT3
R21 3k92
R22 715
R23 1k43
R28 649
R27 649
R26 1k78
R25 715
R29 499
R30 499
R32 499
R33 499
R34 499
R24 7k87
R31 1k
R37 499
PR
C3 10μ
R6 27k
V3 2SC2714
R3 75
R9 3.9k
R12 1k
R15 499
R16 1k8
R18 499
C5 1p
C7 1p
R20 2k1
PB
C2 10μ
V2 2SC2714
R2 75
R8 3.9k
R11 1k
R13 536
R14 301
R17 499
C4 1p
N2 AD828
R35 768
R36 1k43
R19 2k21
C6 1p
N3 AD8073
R44 75
C8 100μ
C14 103
R43 649
R45 75
R42 649
R38 649
R39 649
R40
R41 649
R46 75
R47 75
C9 100μ
C15 103
R48 75
R49 75
C10 100μ
C16 103
N6 M52756
IN1 (R)
Vcc1 (R) (5V)
IN1 (B)
Vcc1 (B) (5V)
IN1 (G)
IN1 (H)
IN1 (V)
IN2 (R)
Vcc (G) (5V)
IN2 (B)
Vcc (H/V) (5V)
IN2 (G)
IN2 (H)
IN2 (V)
SWITCH
Vcc (R) (12V)
OUT (R)
GND (R)
Vcc (B) (12V)
OUT (B)
GND (B)
Vcc (G) (12V)
OUT (G)
GND (G)
G Buffer OUT
Sync Sepa IN
Sync Sepa OUT
OUT (H)
OUT (V)
GND (H/V)
R55 75
R56 75
R57 75
R58 75
R59 75
R60 75
C20 1μ
R61 100k
R63 3k9
R64 3k9
R65 1k
X4
GND
R
GND
G
GND
B
GND
GND
V
H
X6
YUV/RGB
GND
S1
C63 100p
R
G
B
H
V
C11 100μ
C17 103
C12 100μ
C18 103
C13 100μ
C19 103
VD2 Hz6B3
R50 75
VD3 Hz6B3
R51 75
VD4 Hz6B3
R52 75
R53 1k
R54 1k
N5 74LS221
VCC
Rext/Cext 1
Cext1
Q1
/Q2
CLR2
B2
A2
A1
B1
CLR1
/Q1
Q2
Cext 2
Rext/Cext 2
GND
R66 15k
C22 2n2
R85 18k
C21 100p
V5 BC847
R69 3k9
R68 3k9
C24 2n2
C23 2n2
R67 1k
V4 BC847
R71 10k
L3 100μH
C26 105
C25 47μ
N4 TPS6735
EN
REF
SS
COMP
VCC
OUT
GND
FB
R72 130k
C27 10μ
C28 104
R73 300k
C29 82p
VD1 RGP10J
L1 10μH
L2 22μH
C30 100μ
C31 22μ
X2
DB15
X2
DB15

五、信号输入电路

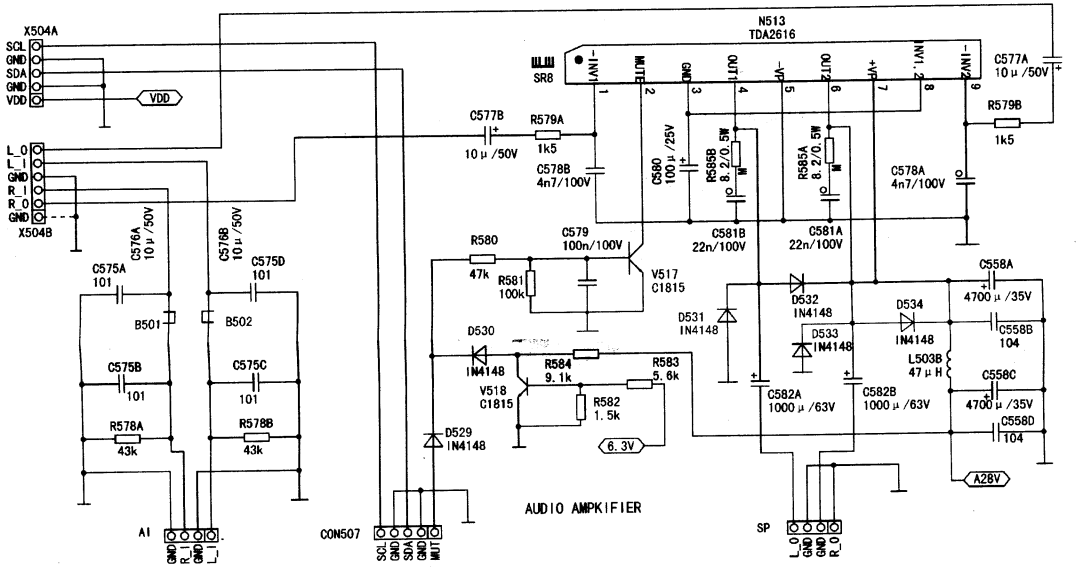
X504A
SCL
GND
SDA
GND
VDD
VDD
L_O
L_I
GND
R_I
R_O
GND
X504B
N513
TDA2616
SR8
-INV1
MUTE
GND
OUT1
-VP
OUT2
+VP
INV1.2
-INV2
C577A
10μ/50V
R579B
1k5
C577B
10μ/50V
R579A
1k5
C578B
4n7/100V
C580
100μ/25V
R585B
8.2/0.5W
R585A
8.2/0.5W
C578A
4n7/100V
C581B
22n/100V
C581A
22n/100V
R580
47k
R581
100k
C579
100n/100V
V517
C1815
D531
IN4148
D532
IN4148
D533
IN4148
D534
IN4148
C558A
4700μ/35V
C558B
104
L503B
47μH
C558C
4700μ/35V
C558D
104
C582A
1000μ/63V
C582B
1000μ/63V
A28V
C576A
10μ/50V
C576B
10μ/50V
C575A
101
C575D
101
B501
B502
C575B
101
C575C
101
R578A
43k
R578B
43k
D530
IN4148
R584
9.1k
R583
5.6k
V518
C1815
R582
1.5k
6.3V
D529
IN4148
AUDIO AMPKIFIER
A1
GND
R_I
GND
L_I
CON507
SCL
GND
SDA
GND
MUT
SP
L_O
GND
GND
R_O

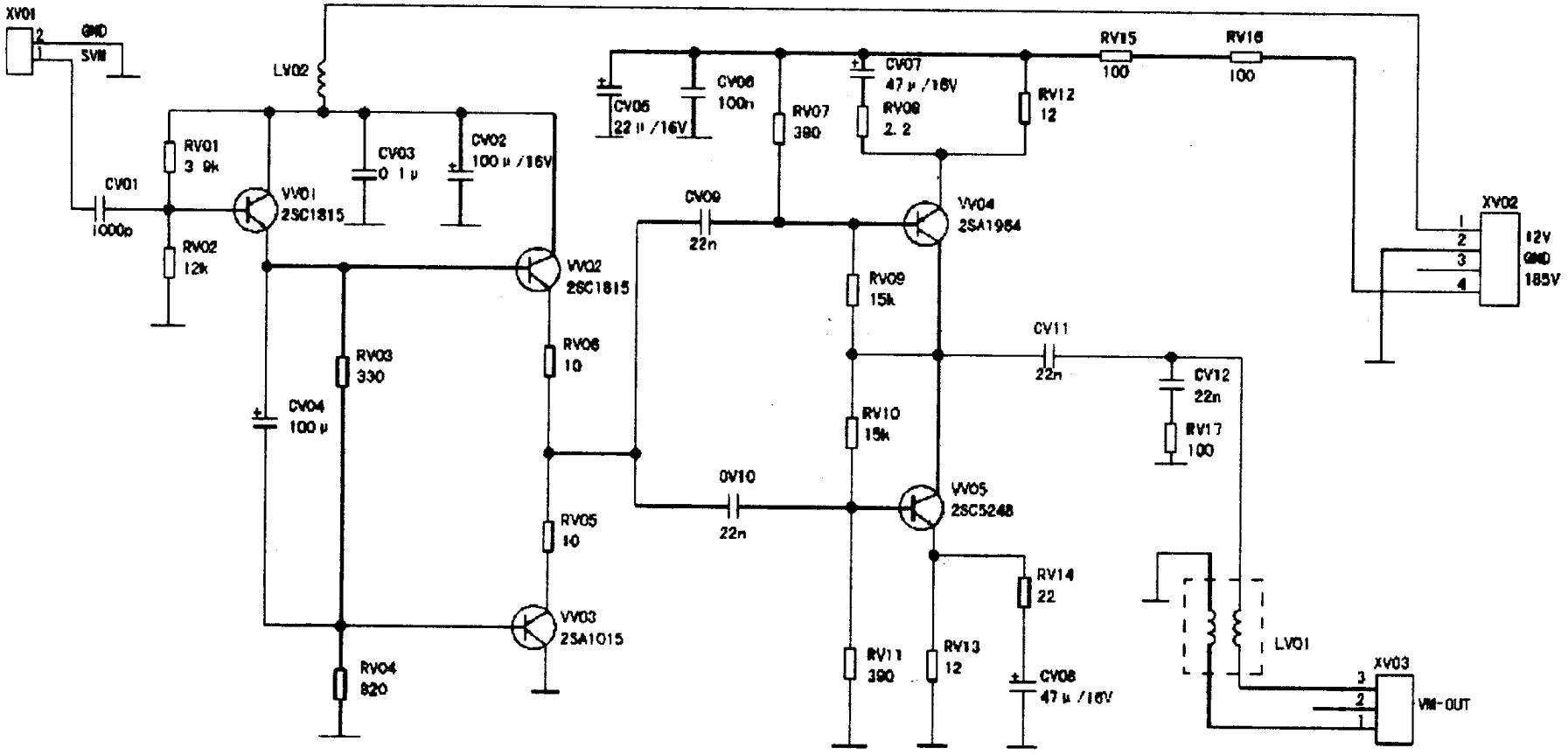
XV01
GND
SVM
LV02
RV01
3.9k
CV01
1000p
RV02
12k
VV01
2SC1815
CV03
0.1μ
CV02
100μ/16V
VV02
2SC1815
RV03
330
CV04
100μ
RV06
10
RV05
10
VV03
2SA1015
RV04
820
CV05
22μ/16V
CV06
100n
RV07
390
CV07
47μ/16V
RV08
2.2
RV12
12
RV15
100
RV16
100
CV09
22n
VV04
2SA1964
RV09
15k
RV10
15k
CV10
22n
VV05
2SC5248
CV11
22n
CV12
22n
RV17
100
RV14
22
RV11
390
RV13
12
CV08
47μ/16V
LV01
XV02
12V
GND
185V
XV03
VM-OUT

七、扫描速度调制电路

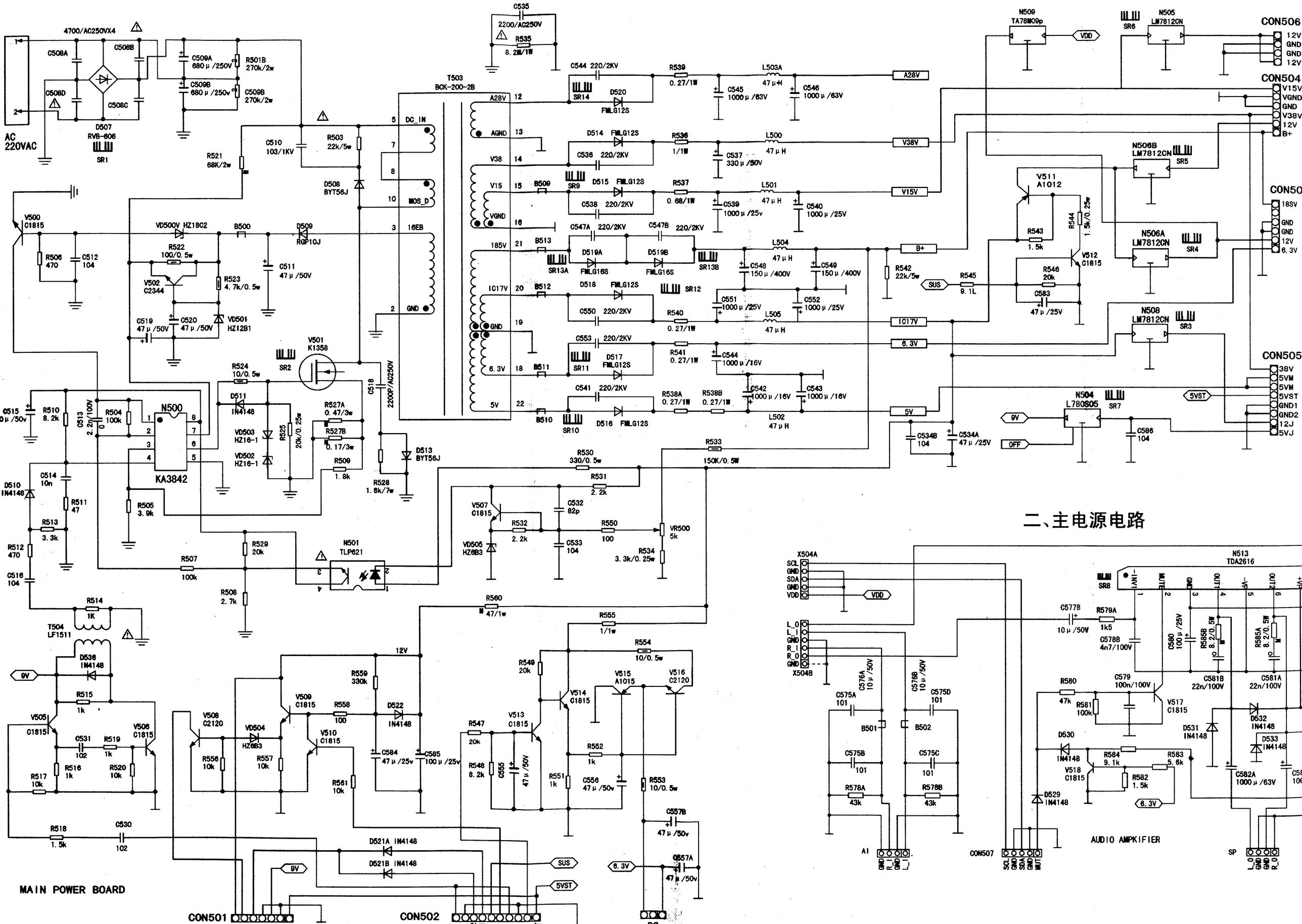
AC 220VAC
4700/AC250VX4
C508A
C508B
C508C
C508D
D507 RVB-606
SR1
C509A 680μ/250V
C509B 680μ/250V
R501B 270k/2w
R521 68K/2w
C510 103/1KV
R503 22k/5w
D508 BYT56J
T503 BCK-200-2B
DC_IN
MOS_D
16EB
GND
C535 2200/AC250V
R535 8.2M/1W
A28V
AGND
V38
V15
VGND
185V
IC17V
6.3V
5V
C544 220/2KV
SR14
D520 FMLG12S
R539 0.27/1W
L503A 47μH
C545 1000μ/63V
C546 1000μ/63V
D514 FMLG12S
R536 1/1W
L500 47μH
C536 220/2KV
C537 330μ/50V
B509
SR9
D515 FMLG12S
R537 0.68/1W
L501 47μH
C538 220/2KV
C539 1000μ/25v
C540 1000μ/25V
C547A 220/2KV
C547B 220/2KV
B513
SR13A
D519A FMLG16S
D519B FMLG16S
SR13B
L504 47μH
C548 150μ/400V
C549 150μ/400V
B512
D518 FMLG12S
SR12
C550 220/2KV
R540 0.27/1W
C551 1000μ/25V
C552 1000μ/25V
L505 47μH
C553 220/2KV
SR11
D517 FMLG12S
R541 0.27/1W
C544 1000μ/16V
C541 220/2KV
R538A 0.27/1W
R538B 0.27/1W
C542 1000μ/16V
C543 1000μ/16V
B511
B510
SR10
D516 FMLG12S
L502 47μH
B+
SUS
R542 22k/5w
R545 9.1L
N509 TA78M09p
VDD
SR6
N505 LM7812CN
CON506
12V
GND
GND
12V
CON504
V15V
VGND
GND
V38V
12V
B+
N506B LM7812CN
SR5
V511 A1012
R543 1.5k
R544 1.5k/0.25w
R546 20k
V512 C1815
C583 47μ/25V
N506A LM7812CN
SR4
CON50
18SV
GND
GND
12V
6.3V
N508 LM7812CN
SR3
CON505
38V
5VM
5VM
5VST
GND1
GND2
12J
5VJ
5VST
N504 L780S05
SR7
9V
OFF
C534B 104
C534A 47μ/25V
C586 104
V500 C1815
R506 470
C512 104
VD500V HZ18C2
B500
D509 RGP10J
R522 100/0.5w
V502 C2344
R523 4.7k/0.5w
C511 47μ/50V
C519 47μ/50V
C520 47μ/50V
VD501 HZ12B1
V501 K1358
SR2
R524 10/0.5w
D511 IN4148
VD503 HZ16-1
VD502 HZ16-1
R525 20k/0.25w
R527A 0.47/3w
R527B 0.17/3w
R509 1.8k
R528 1.8k/7w
C518 2200P/AC250V
D513 BYT56J
C515 10μ/50v
R510 8.2k
C513 2.2n/100V
R504 100k
N500
KA3842
D510 IN4148
C514 10n
R511 47
R513 3.3k
R512 470
C516 104
R505 3.9k
R507 100k
R508 2.7k
R529 20k
N501 TLP621
R530 330/0.5w
R531 2.2k
R533 150K/0.5W
V507 C1815
R532 2.2k
VD505 HZ6B3
C532 82p
C533 104
R550 100
VR500 5k
R534 3.3k/0.25w
R514 1K
T504 LF1511
D536 IN4148
R515 1k
V505 C1815
V506 C1815
C531 102
R519 1k
R516 1k
R520 10k
R517 10k
R518 1.5k
C530 102
R560 47/1w
R555 1/1w
R554 10/0.5w
12V
R559 330k
V509 C1815
R558 100
D522 IN4148
V508 C2120
VD504 HZ6B3
R556 10k
R557 10k
V510 C1815
R561 10k
C584 47μ/25v
C585 100μ/25v
R549 20k
V514 C1815
V515 A1015
V516 C2120
V513 C1815
R547 20k
R548 8.2k
C555 47μ/50V
R551 1k
C556 47μ/50v
R552 1k
R553 10/0.5w
C557B 47μ/50v
C557A 47μ/50v
6.3V
D521A IN4148
D521B IN4148
SUS
5VST
MAIN POWER BOARD
CON501
CON502
二、主电源电路
X504A
SCL
GND
SDA
GND
VDD
X504B
L_O
L_I
GND
R_I
R_O
GND
C576A 10μ/50V
C576B 10μ/50V
C575A 101
C575D 101
B501
B502
C575B 101
C575C 101
R578A 43k
R578B 43k
AI
CON507
N513 TDA2616
SR8
C577B 10μ/50V
R579A 1k5
C578B 4n7/100V
C580 100μ/25V
R585B 8.2/0.5W
R585A 8.2/0.5W
C581B 22n/100V
C581A 22n/100V
R580 47k
R581 100k
C579 100n/100V
V517 C1815
D530 IN4148
R584 9.1k
R583 5.6k
V518 C1815
R582 1.5k
D529 IN4148
6.3V
D531 IN4148
D532 IN4148
D533 IN4148
C582A 1000μ/63V
AUDIO AMPKIFIER
SP