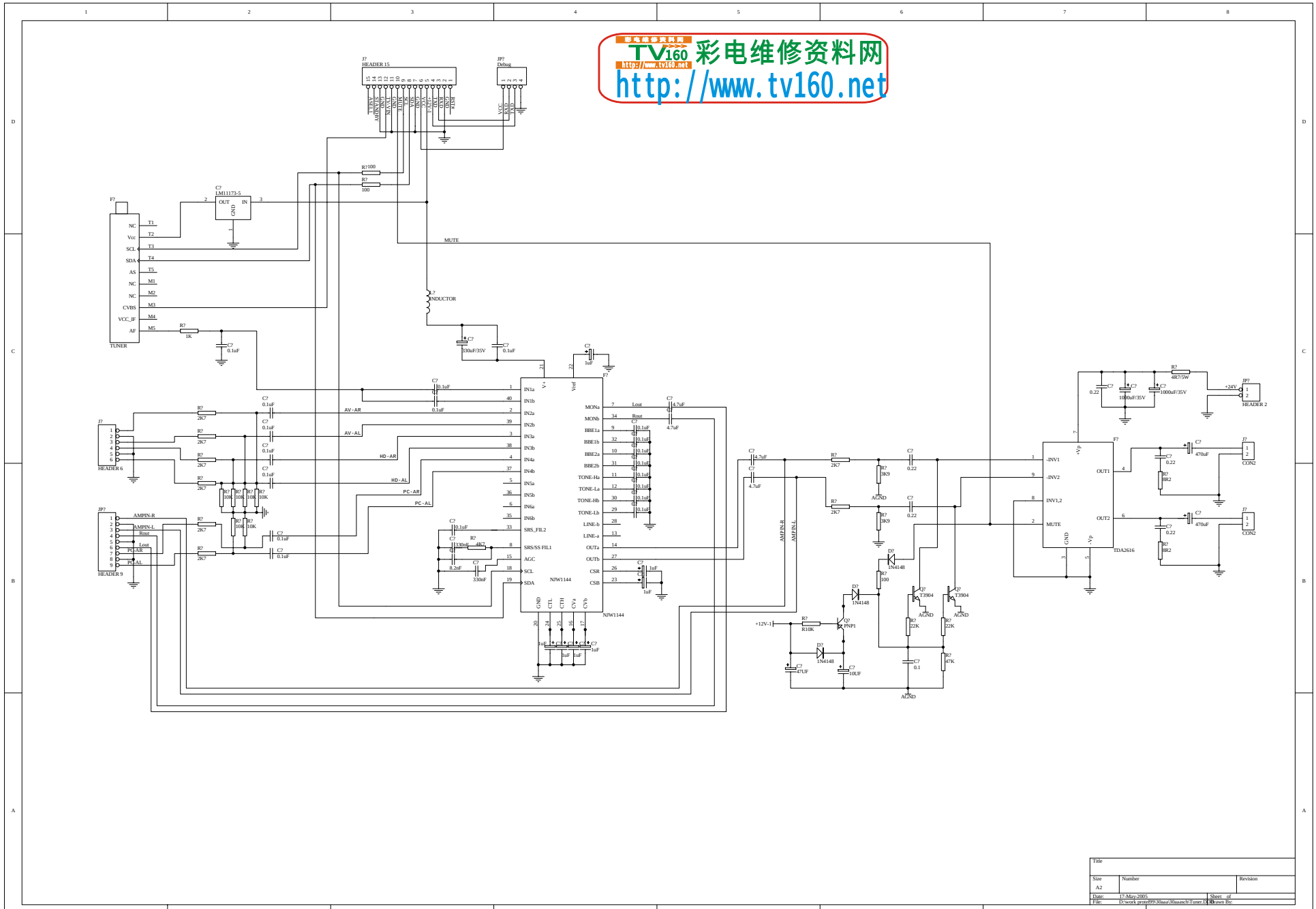

彩电维修资料网
TV160
http://www.tv160.net
http://www.tv160.net

Title		
Size A2	Number	Revision
Date: 17-May-2005	Sheet of	
File: D:\work proteP9?\30aaa\30aaasch\Tuner.DDB	Drawn By:	

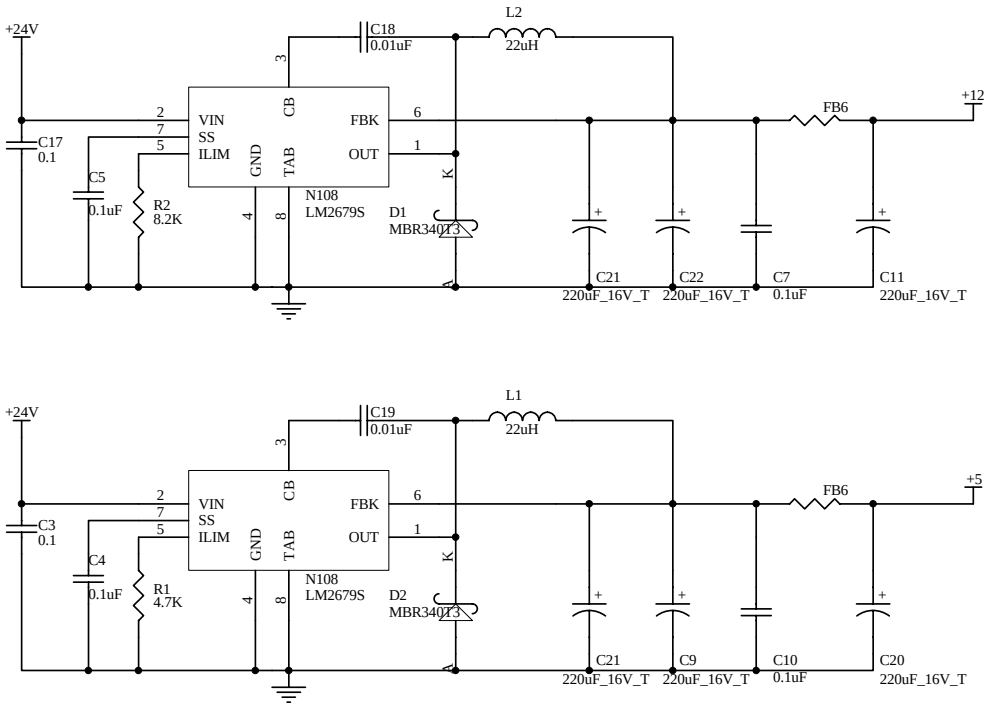

Title		
Size A4	Number	Revision
Date: 17-May-2005		Sheet of
File: D:\work protel99\30aaa\30aaasch\SHASTA.DDB		Drawn By:

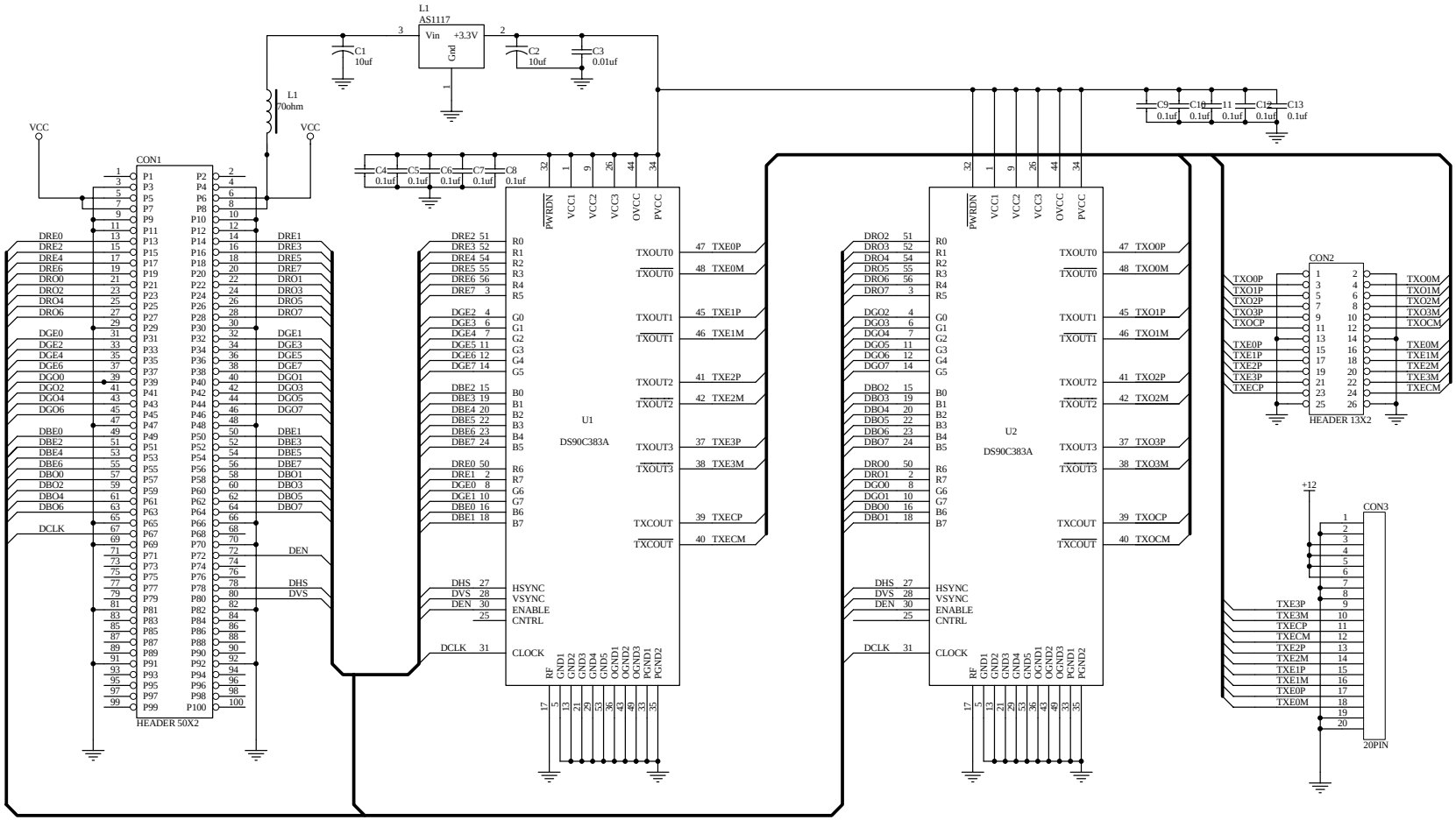

Title		
Size A3	Number	Revision
Date: 17-May-2005	Sheet of	
File: D:\work protel99\30aaa\30aaasch\Dlvds-1.SCH	Drawn By:	

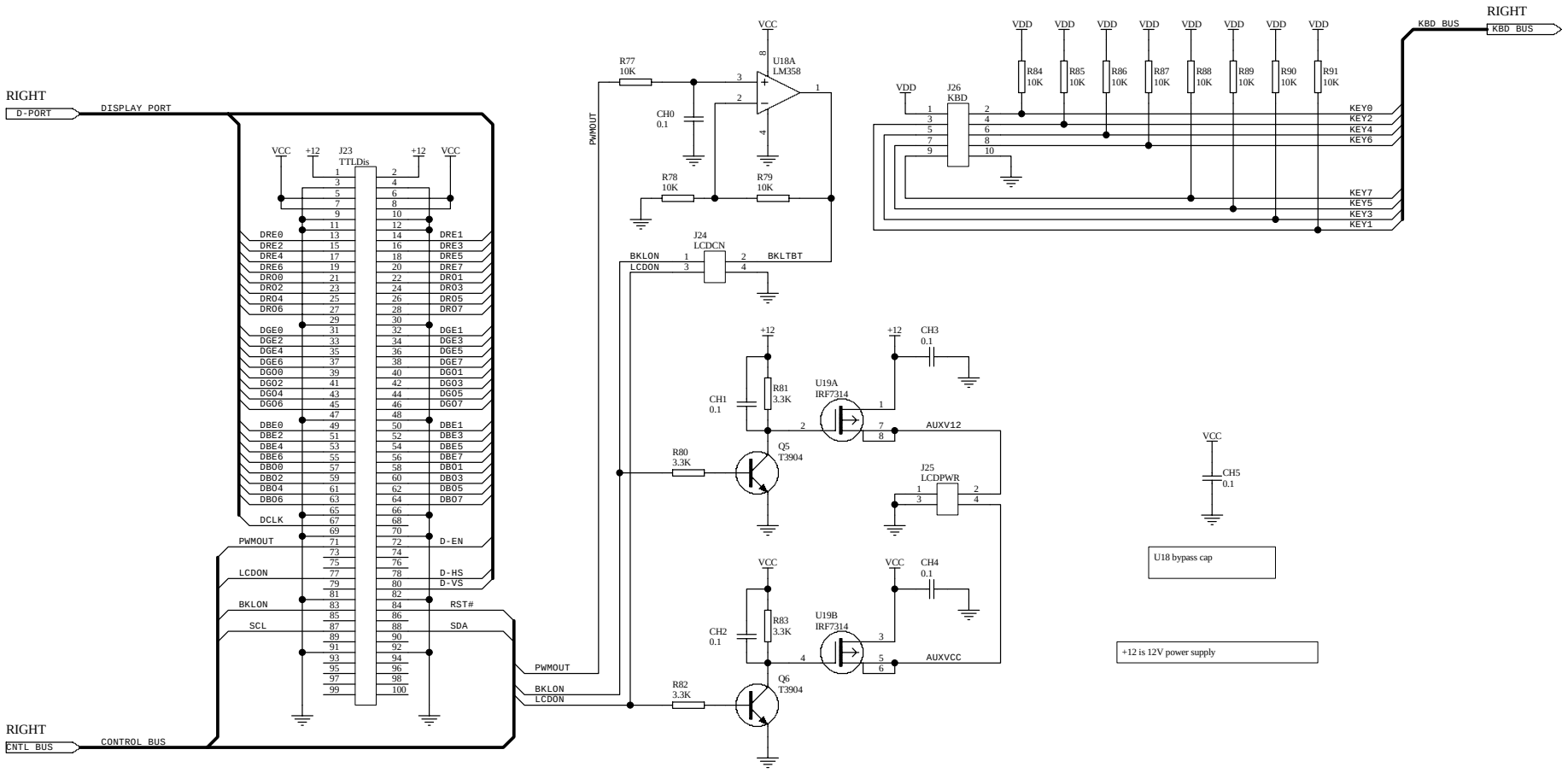

Pixelworks, Inc.

Title	DAHLIA (LCDTV 1230)		
Size A3	Number 900-XXXX-XX 08		Revision A.1
Date: 17-May-2005		Sheet 8 of 10	
File: D:\work protel99\30aaa\30aaasch\SHASTA.DDB		Drawn By: C.F. PANG	

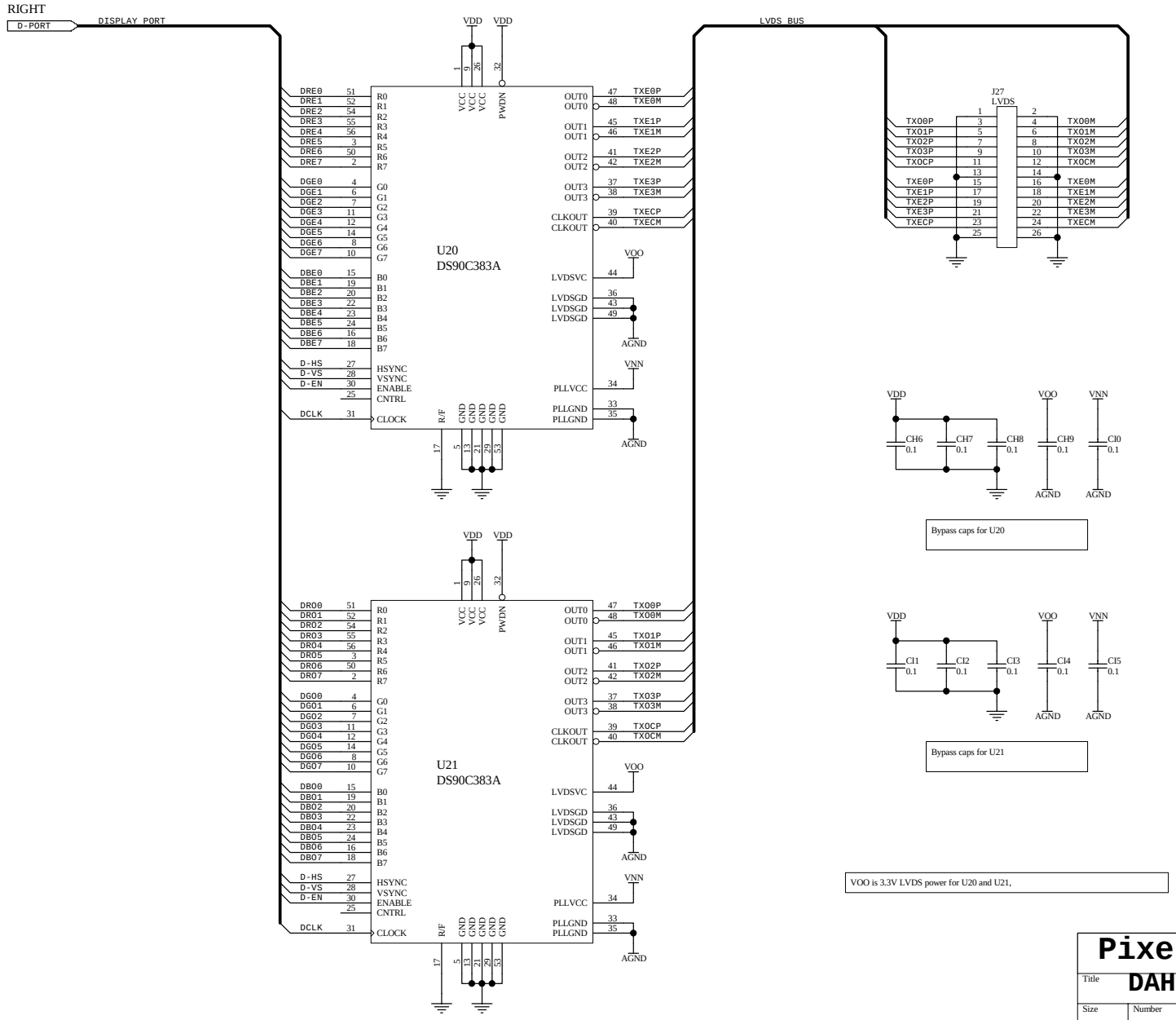

Pixelworks, Inc.

Title	DAHLIA (LCDTV 1230)		
Size A3	Number 900-XXXX-XX 09		Revision A.1
Date: 17-May-2005		Sheet 9 of 10	
File: D:\work protel99\30aaa\30aaasch\SHASTA.DDB		Drawn By: C.F. PANG	

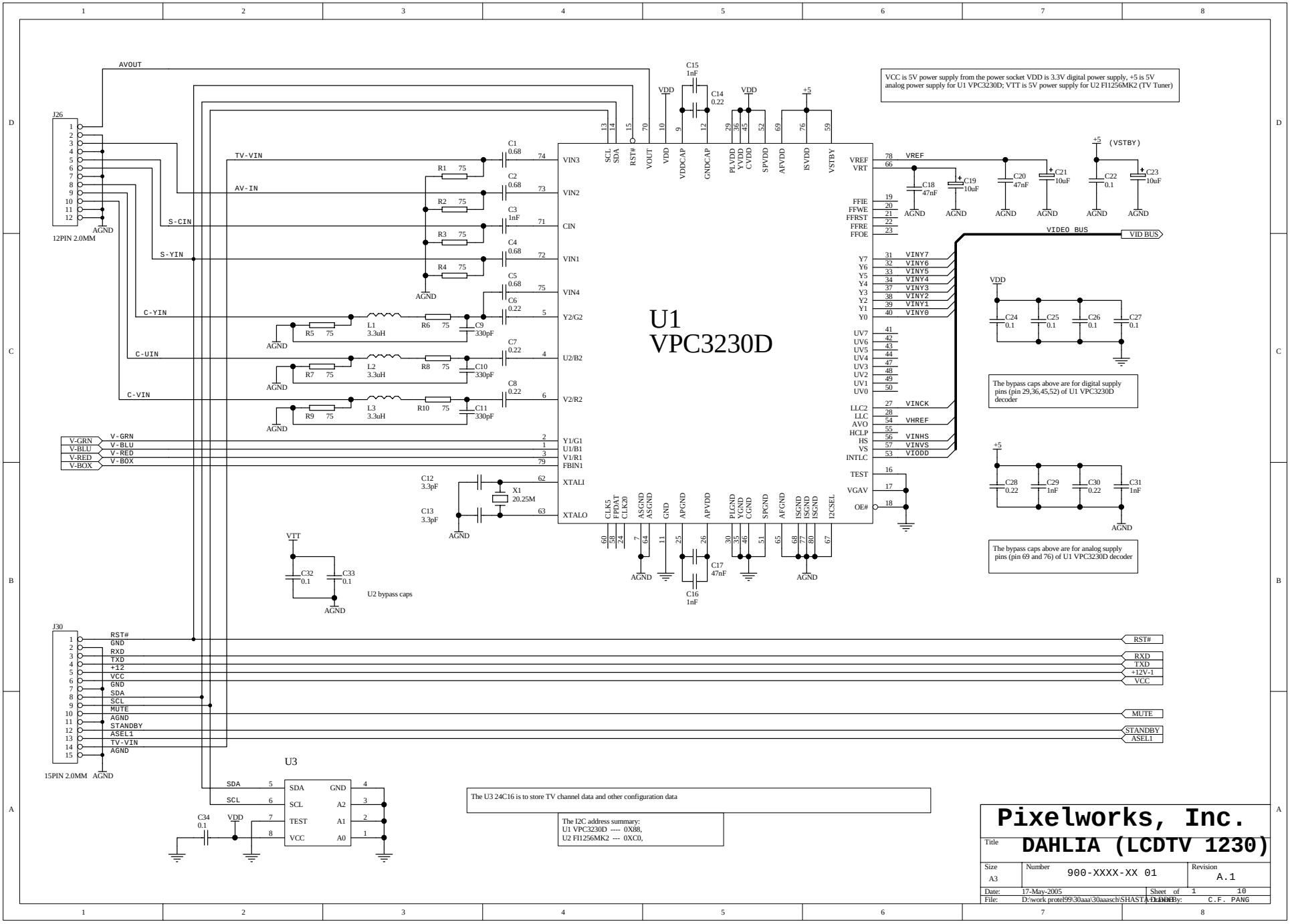
VCC is 5V power supply from the power socket VDD is 3.3V digital power supply, +5 is 5V analog power supply for U1 VPC3230D; VTT is 5V power supply for U2 FI1256MK2 (TV Tuner)
U1
VPC3230D
J26
12PIN 2.0MM
AVOUT
TV-VIN
AV-IN
S-CIN
S-YIN
C-YIN
C-UIN
C-VIN
V-GRN
V-BLU
V-RED
V-BOX
AGND
VIN3
VIN2
CIN
VIN1
VIN4
Y2/G2
U2/B2
V2/R2
Y1/G1
U1/B1
V1/R1
FBIN1
XTALI
XTALO
VREF
VRT
FFIE
FFWE
FFRST
FFRE
FFOE
Y7
Y6
Y5
Y4
Y3
Y2
Y1
Y0
UV7
UV6
UV5
UV4
UV3
UV2
UV1
UV0
LLC2
LLC
AVO
HCLP
HS
VS
INTLC
TEST
VGAV
OE#
VINY7
VINY6
VINY5
VINY4
VINY3
VINY2
VINY1
VINY0
VINCK
VHREF
VINHS
VINVS
VIODD
VIDEO BUS
VID BUS
(VSTBY)
The bypass caps above are for digital supply pins (pin 29,36,45,52) of U1 VPC3230D decoder
The bypass caps above are for analog supply pins (pin 69 and 76) of U1 VPC3230D decoder
U2 bypass caps
VTT
J30
15PIN 2.0MM
RST#
GND
RXD
TXD
+12
VCC
SDA
SCL
MUTE
STANDBY
ASEL1
TV-VIN
+12V-1
U3
The U3 24C16 is to store TV channel data and other configuration data
The I2C address summary:
U1 VPC3230D ---- 0X88,
U2 FI1256MK2 --- 0XC0,
Pixelworks, Inc.
Title
DAHLIA (LCDTV 1230)
Size
A3
Number
900-XXXX-XX 01
Revision
A.1
Date: 17-May-2005
Sheet of 1 10
File: D:\work protel99\30aaa\30aaasch\SHASTA.DDB
Drawn By: C.F. PANG

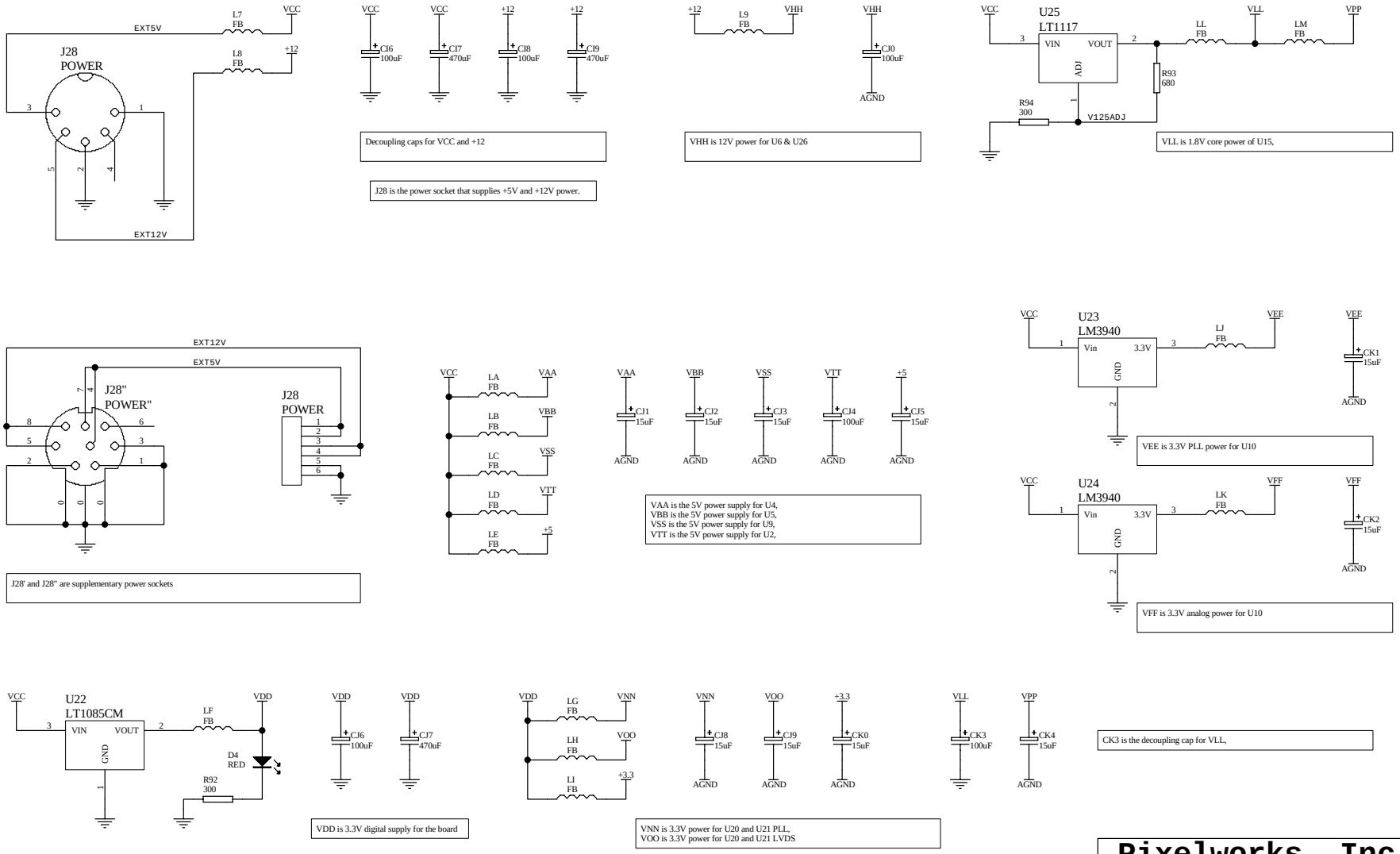

Pixelworks, Inc.			
Title DAHLIA (LCDTV 1230)			
Size A3	Number 900-XXXX-XX 10		Revision A.1
Date: 17-May-2005		Sheet of 10 10	
File: D:\work protel99\30aaa\30aaasch\SHASTA.DDB		Drawn By: C.F. PANG	

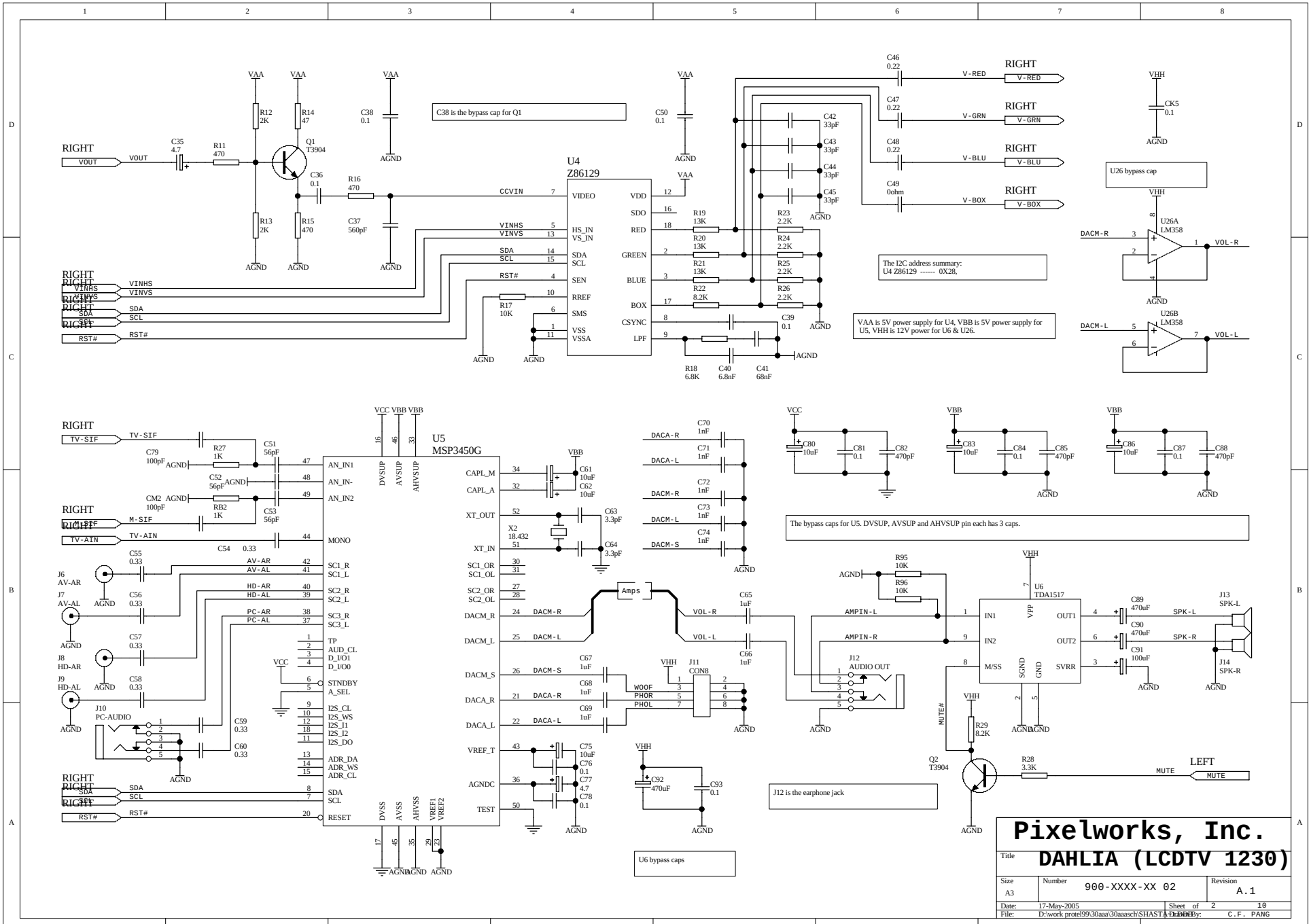
C38 is the bypass cap for Q1
U4
Z86129
U5
MSP3450G
U6
TDA1517
U26A
LM358
U26B
LM358
U26 bypass cap
The I2C address summary:
U4 Z86129 ------ 0X28,
VAA is 5V power supply for U4, VBB is 5V power supply for U5, VHH is 12V power for U6 & U26.
The bypass caps for U5. DVSUP, AVSUP and AHVSUP pin each has 3 caps.
U6 bypass caps
J12 is the earphone jack
Amps
Pixelworks, Inc.
Title
DAHLIA (LCDTV 1230)
Size
A3
Number
900-XXXX-XX 02
Revision
A.1
Date: 17-May-2005
Sheet of 2 10
File: D:\work protel99\30aaa\30aaasch\SHASTA.DDB
Drawn By: C.F. PANG

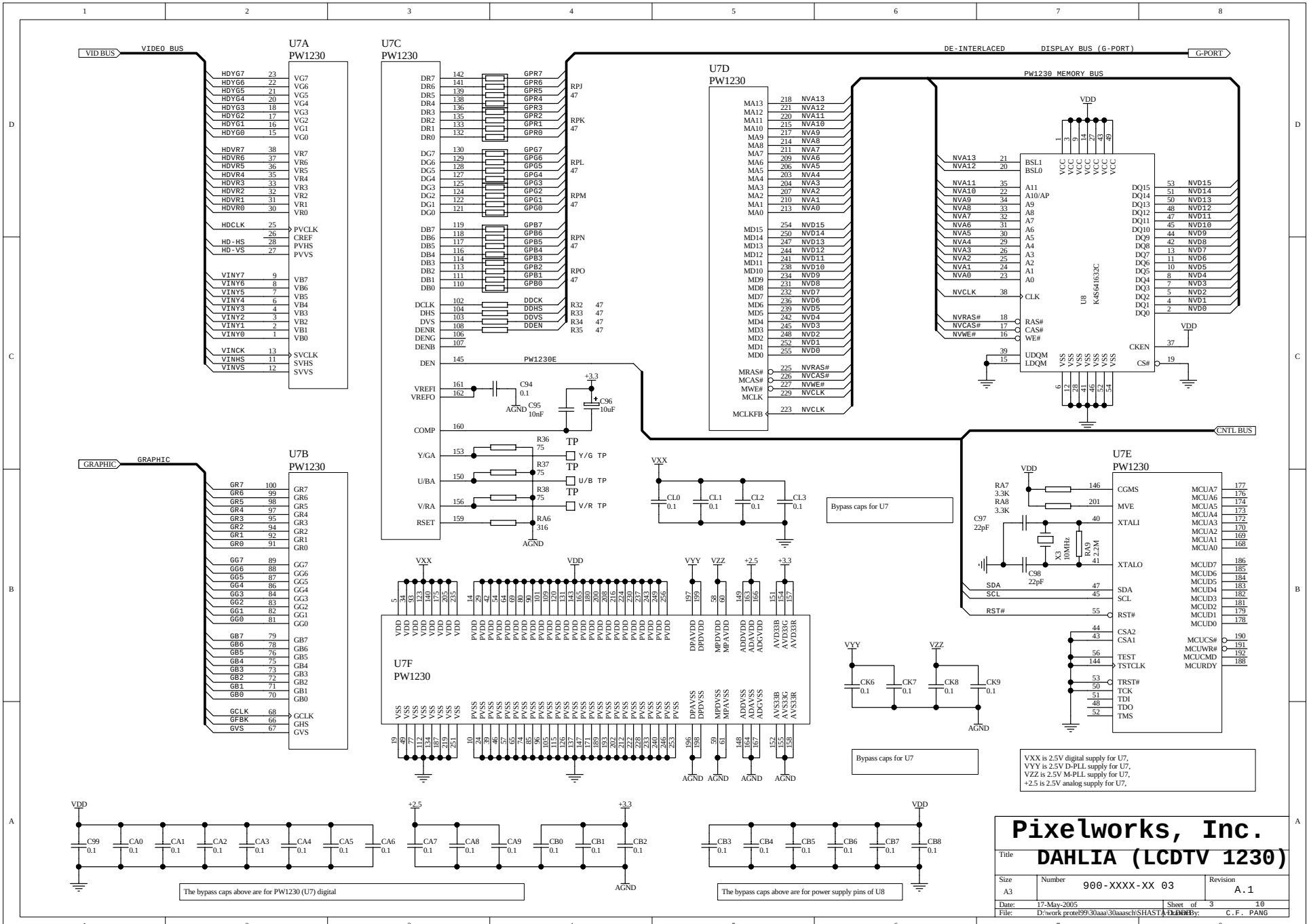
U7A PW1230
U7B PW1230
U7C PW1230
U7D PW1230
U7E PW1230
U7F PW1230
U8 K4S641632C
VIDEO BUS
GRAPHIC
DE-INTERLACED
DISPLAY BUS (G-PORT)
G-PORT
PW1230 MEMORY BUS
CNTL BUS
PW1230E
Bypass caps for U7
VXX is 2.5V digital supply for U7,
VYY is 2.5V D-PLL supply for U7,
VZZ is 2.5V M-PLL supply for U7,
+2.5 is 2.5V analog supply for U7,
The bypass caps above are for PW1230 (U7) digital
The bypass caps above are for power supply pins of U8
Pixelworks, Inc.
Title DAHLIA (LCDTV 1230)
Size A3
Number 900-XXXX-XX 03
Revision A.1
Date: 17-May-2005
Sheet of 3 10
File: D:\work protel99\30aaa\30aaasch\SHASTA.DDB
Drawn By: C.F. PANG

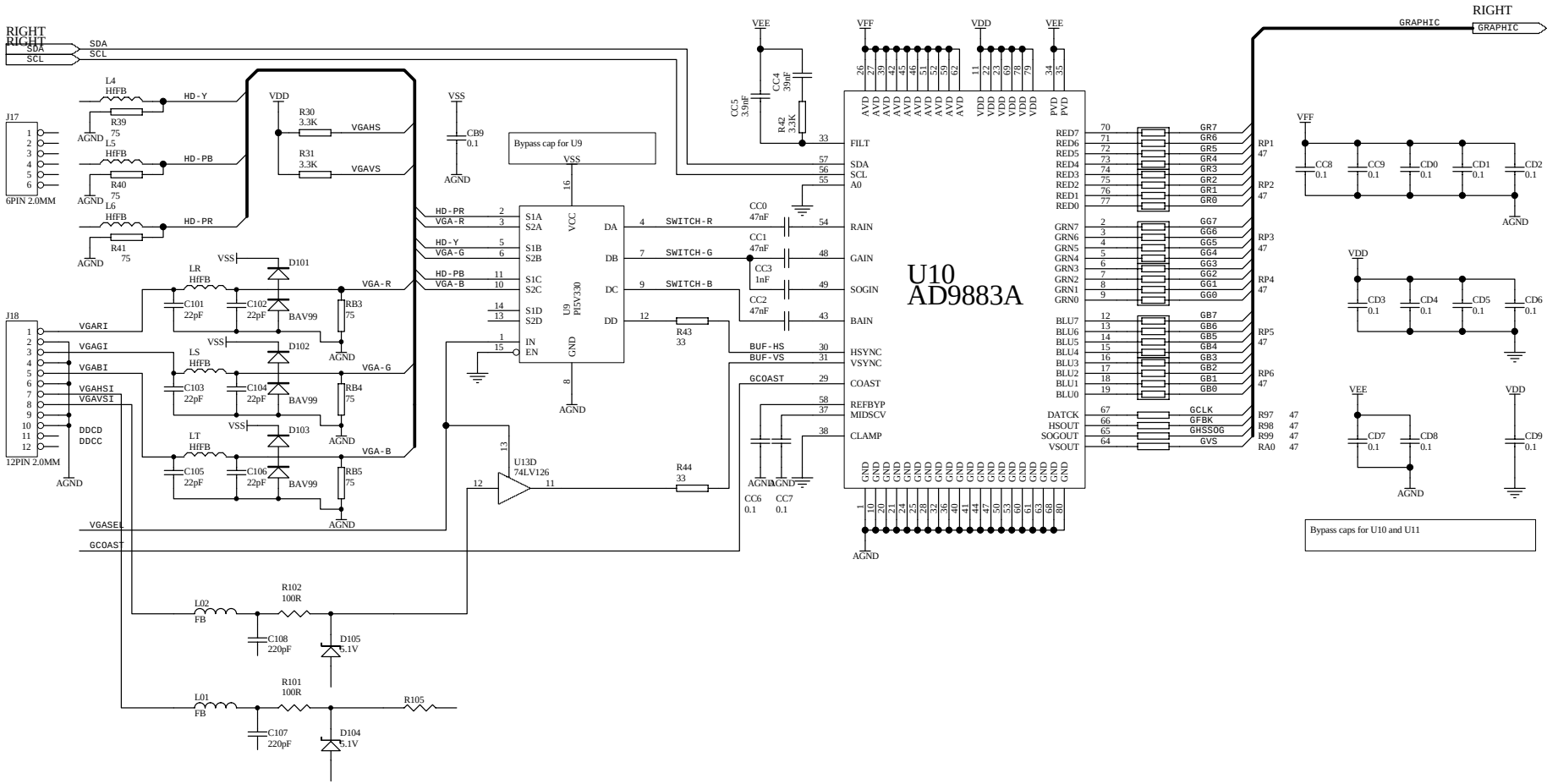

Pixelworks, Inc.

Title	DAHLIA (LCDTV 1230)		
Size A3	Number 900-XXXX-XX 04		Revision A.1
Date: 17-May-2005		Sheet 4 of 10	
File: D:\work protel99\30aaa\30aaasch\SHASTA.DDB		Drawn By: C.F. PANG	

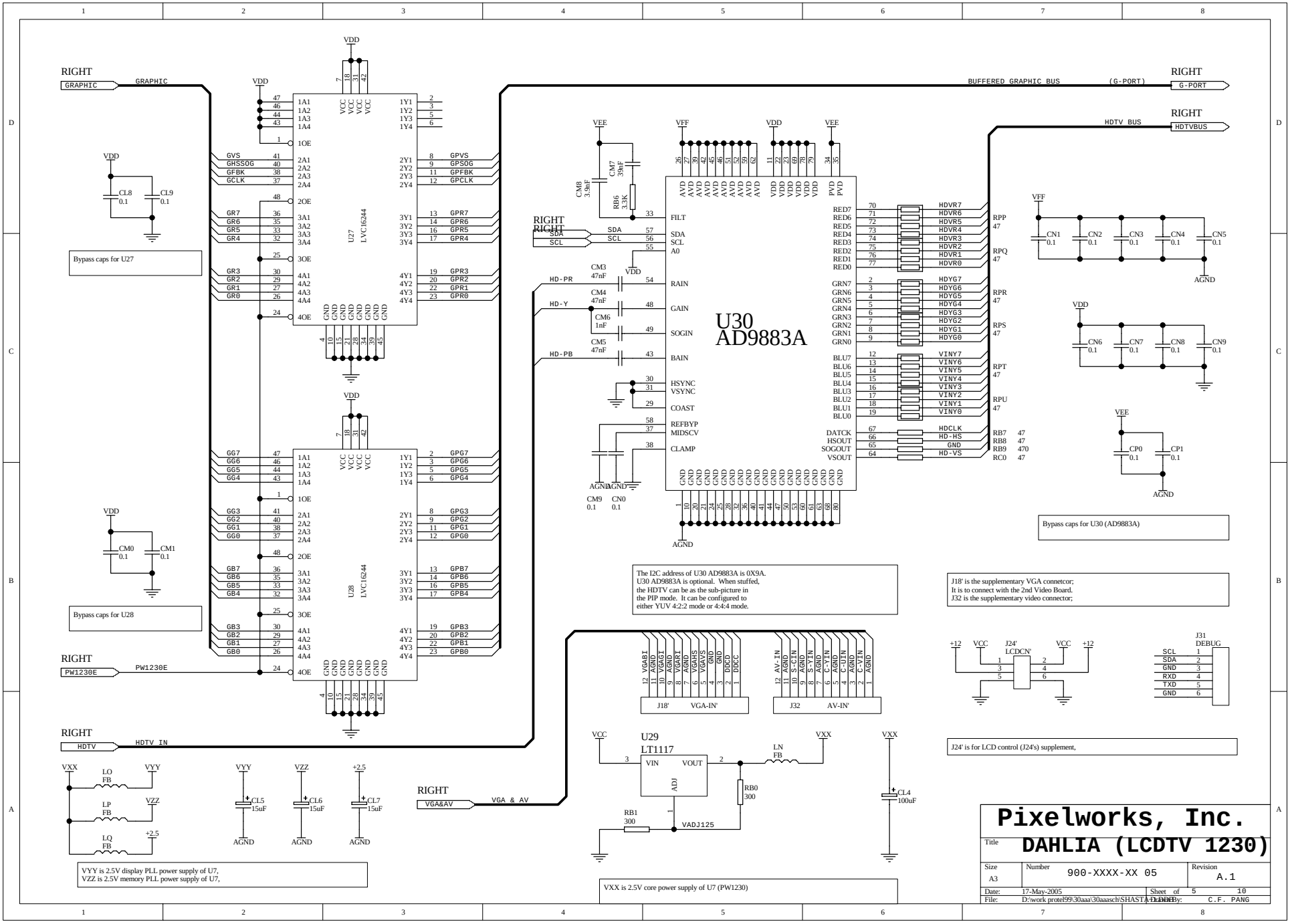
RIGHT
GRAPHIC
BUFFERED GRAPHIC BUS
(G-PORT)
G-PORT
HDTV BUS
HDTVBUS
U27
LVC16244
U28
LVC16244
U30
AD9883A
Bypass caps for U27
Bypass caps for U28
Bypass caps for U30 (AD9883A)
The I2C address of U30 AD9883A is 0X9A.
U30 AD9883A is optional. When stuffed,
the HDTV can be as the sub-picture in
the PIP mode. It can be configured to
either YUV 4:2:2 mode or 4:4:4 mode.
J18' is the supplementary VGA connetcor;
It is to connect with the 2nd Video Board.
J32 is the supplementary video connector;
J18' VGA-IN'
J32 AV-IN'
J24' LCDCN'
J31 DEBUG
J24' is for LCD control (J24's) supplement,
U29
LT1117
VIN
VOUT
ADJ
VADJ125
VXX is 2.5V core power supply of U7 (PW1230)
VYY is 2.5V display PLL power supply of U7,
VZZ is 2.5V memory PLL power supply of U7,
RIGHT
PW1230E
HDTV
HDTV IN
VGA&AV
VGA & AV
Pixelworks, Inc.
Title
DAHLIA (LCDTV 1230)
Size
A3
Number
900-XXXX-XX 05
Revision
A.1
Date: 17-May-2005
Sheet of 5 10
File: D:\work protel99\30aaa\30aaasch\SHASTA.DDB
Drawn By: C.F. PANG

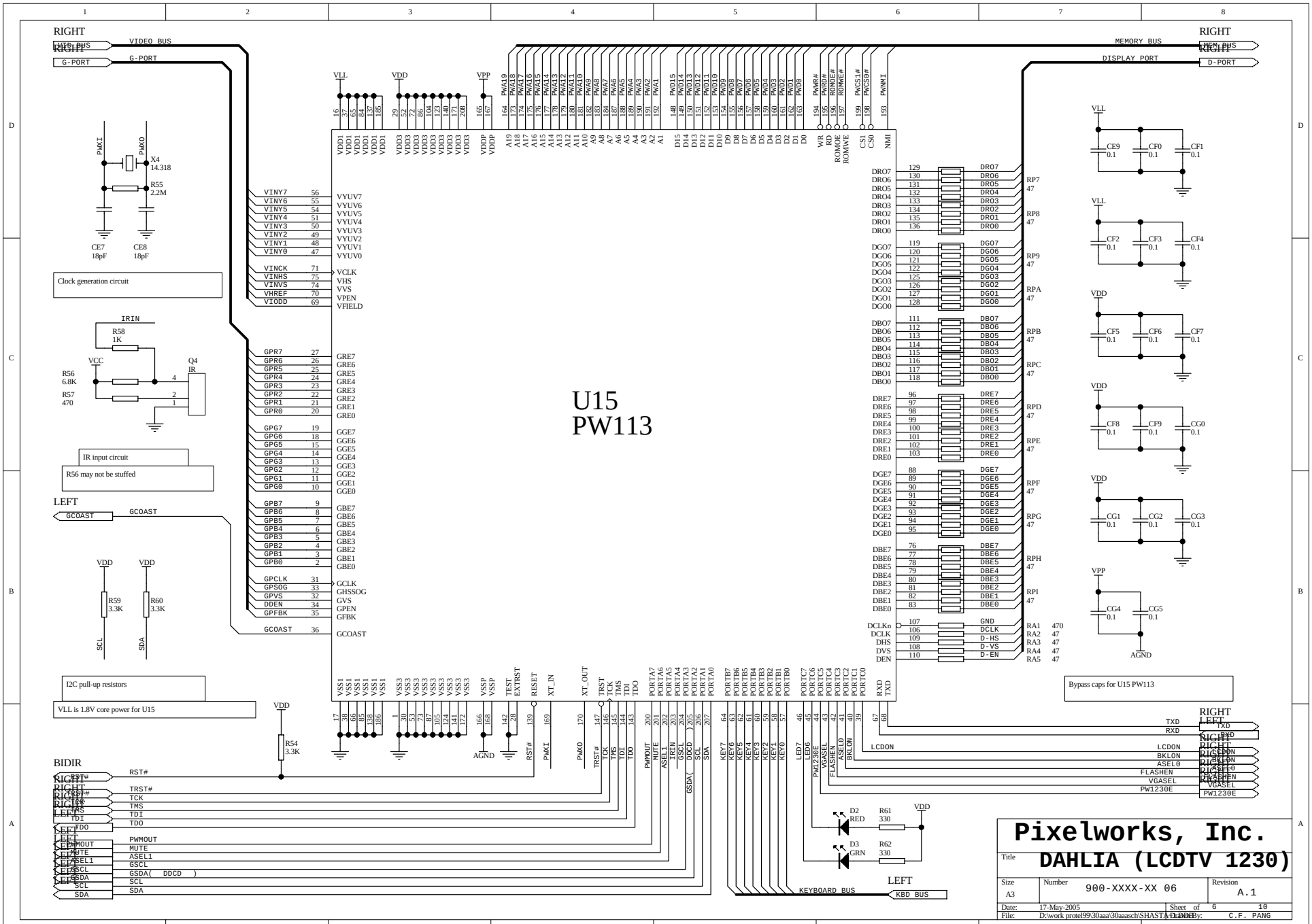
U15
PW113
Clock generation circuit
IR input circuit
R56 may not be stuffed
I2C pull-up resistors
VLL is 1.8V core power for U15
Bypass caps for U15 PW113
Pixelworks, Inc.
DAHLIA (LCDTV 1230)
Size A3
Number 900-XXXX-XX 06
Revision A.1
Date: 17-May-2005
Sheet of 6 10
File: D:\work protel99\30aaa\30aaasch\SHASTA.DDB
Drawn By: C.F. PANG

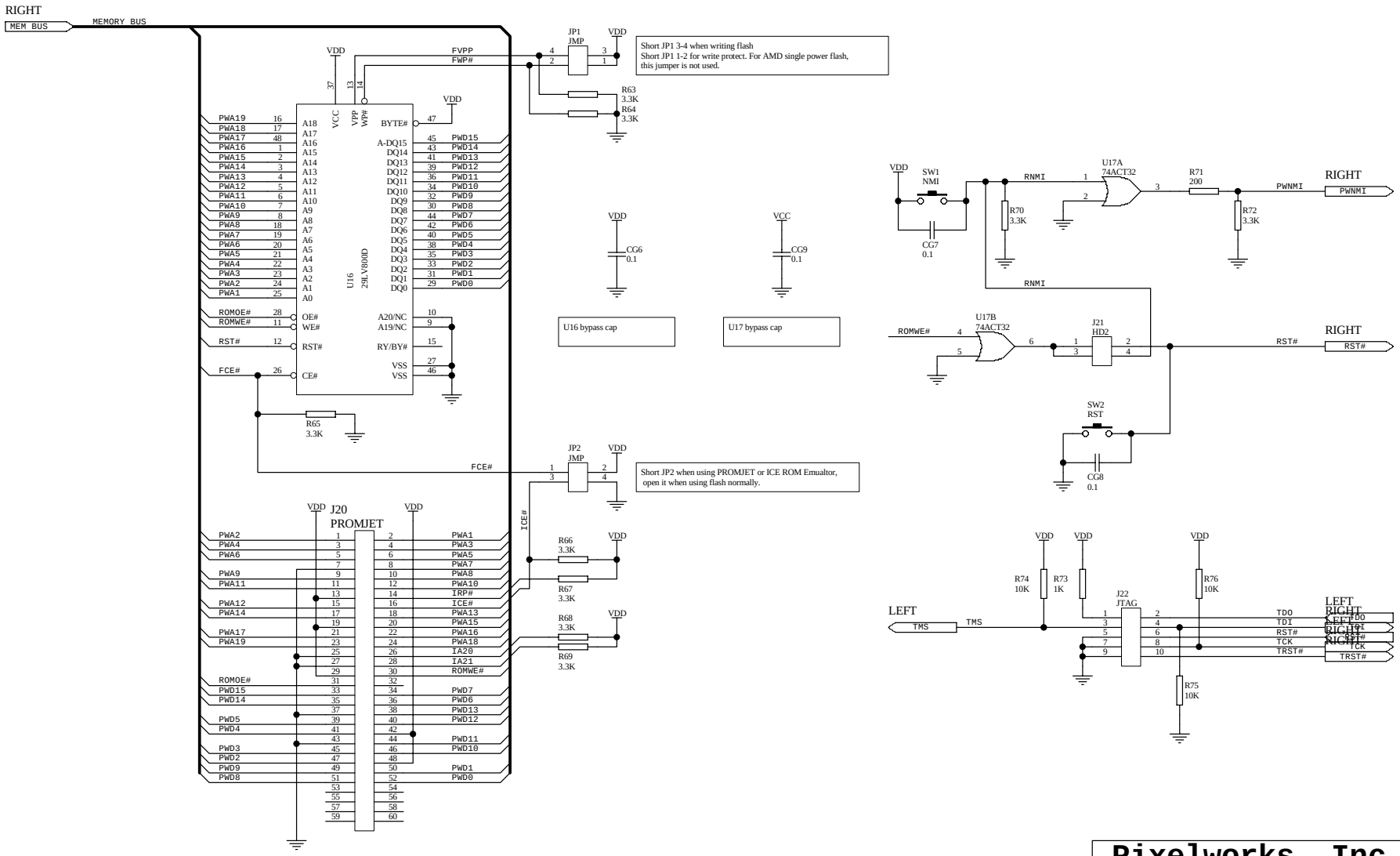

Pixelworks, Inc.

Title	DAHLIA (LCDTV 1230)		
Size A3	Number 900-XXXX-XX 07		Revision A.1
Date: 17-May-2005		Sheet 7 of 10	
File: D:\work protel99\30aaa\30aaasch\SHASTA.DDB		Drawn By: C.F. PANG	