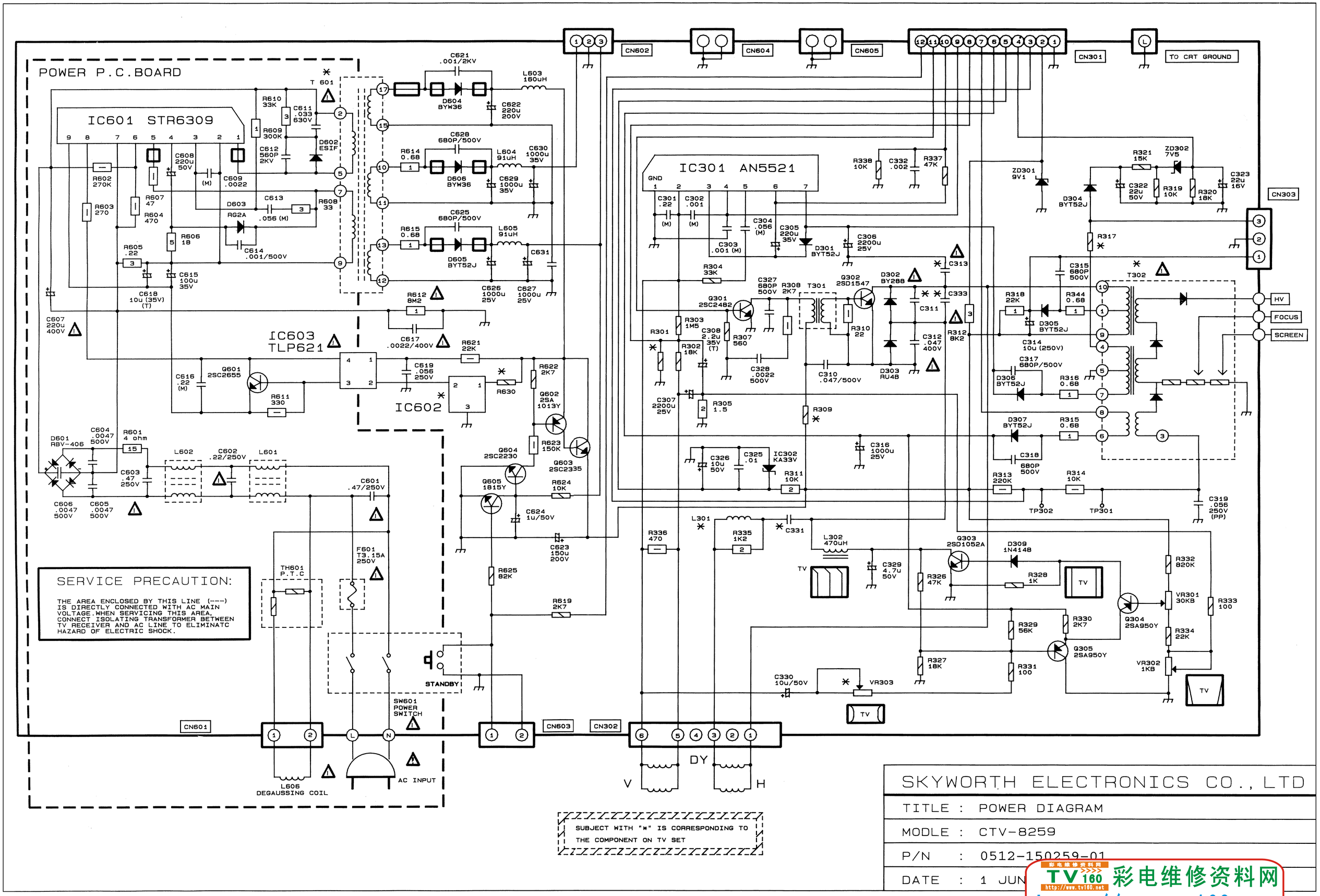
POWER P.C.BOARD
IC601 STR6309
IC603 TLP621
IC602
IC301 AN5521
CN602
CN604
CN605
CN301
CN303
CN601
CN603
CN302
TO CRT GROUND
HV
FOCUS
SCREEN
STANDBY
SW601 POWER SWITCH
AC INPUT
L606 DEGAUSSING COIL
DY
V
H
TV
SERVICE PRECAUTION:
THE AREA ENCLOSED BY THIS LINE (---) IS DIRECTLY CONNECTED WITH AC MAIN VOLTAGE.WHEN SERVICING THIS AREA, CONNECT ISOLATING TRANSFORMER BETWEEN TV RECEIVER AND AC LINE TO ELIMINATC HAZARD OF ELECTRIC SHOCK.
SUBJECT WITH "*" IS CORRESPONDING TO THE COMPONENT ON TV SET
SKYWORTH ELECTRONICS CO., LTD
TITLE : POWER DIAGRAM
MODLE : CTV-8259
P/N : 0512-150259-01
DATE : 1 JUN
彩电维修资料网
http://www.tv160.net
制作