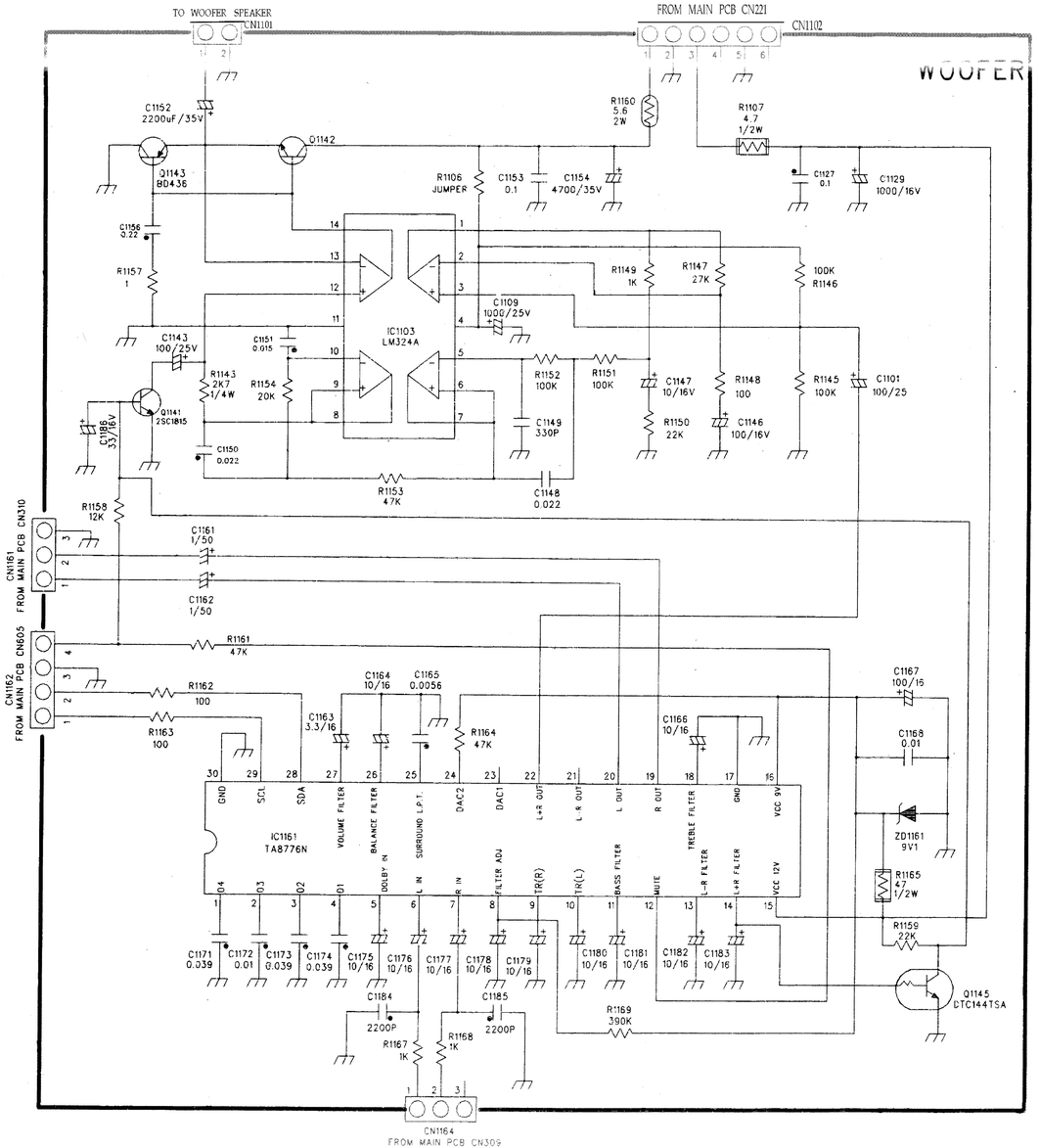

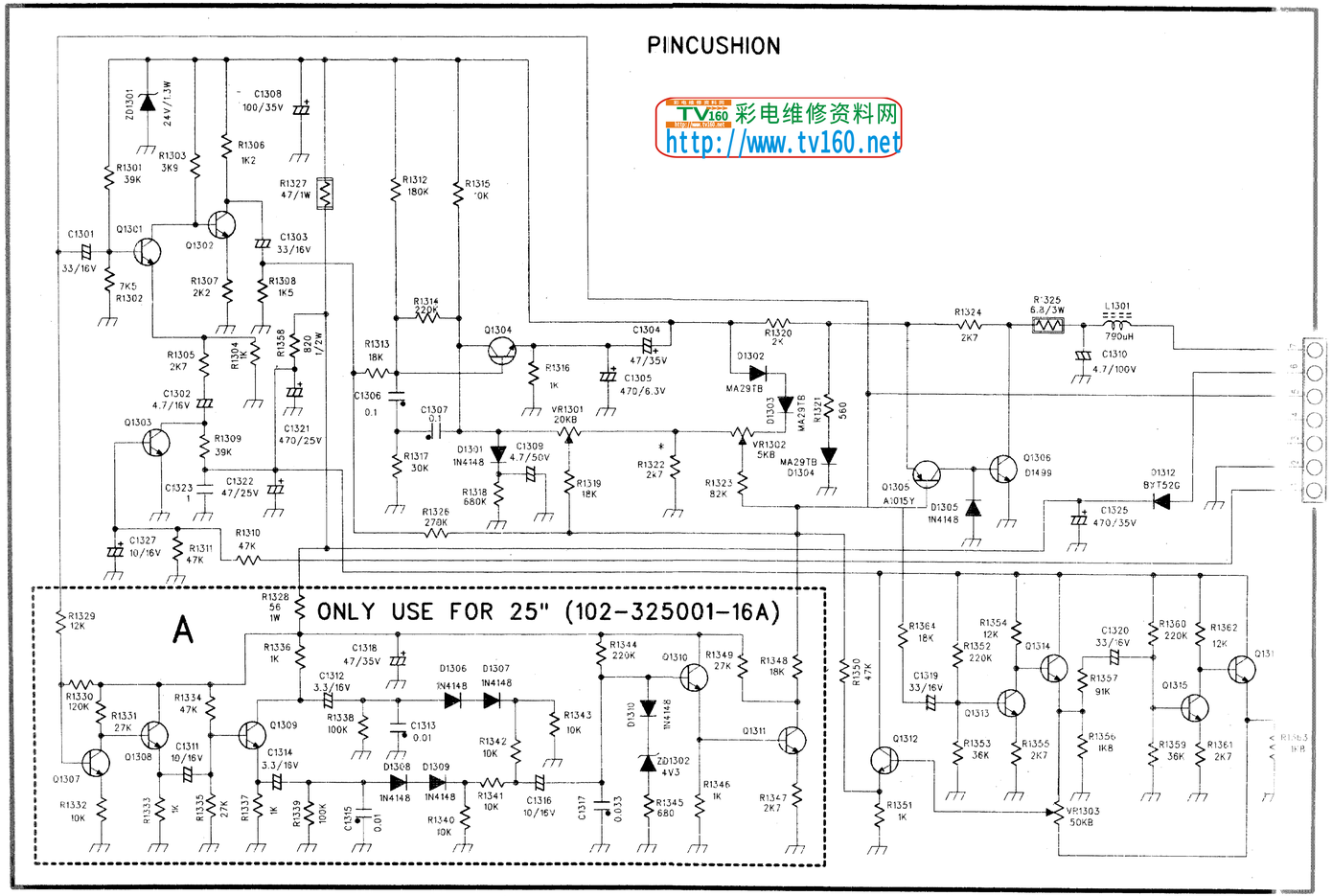

TV160 彩电维修资料网
http://www.tv160.net

MODEL \ LOCATION / VALUE	R1322	A
25"	2K7	A
29"	2K4	NIL