SCHEMATIC DIAGRAM (MODEL TH-2118)

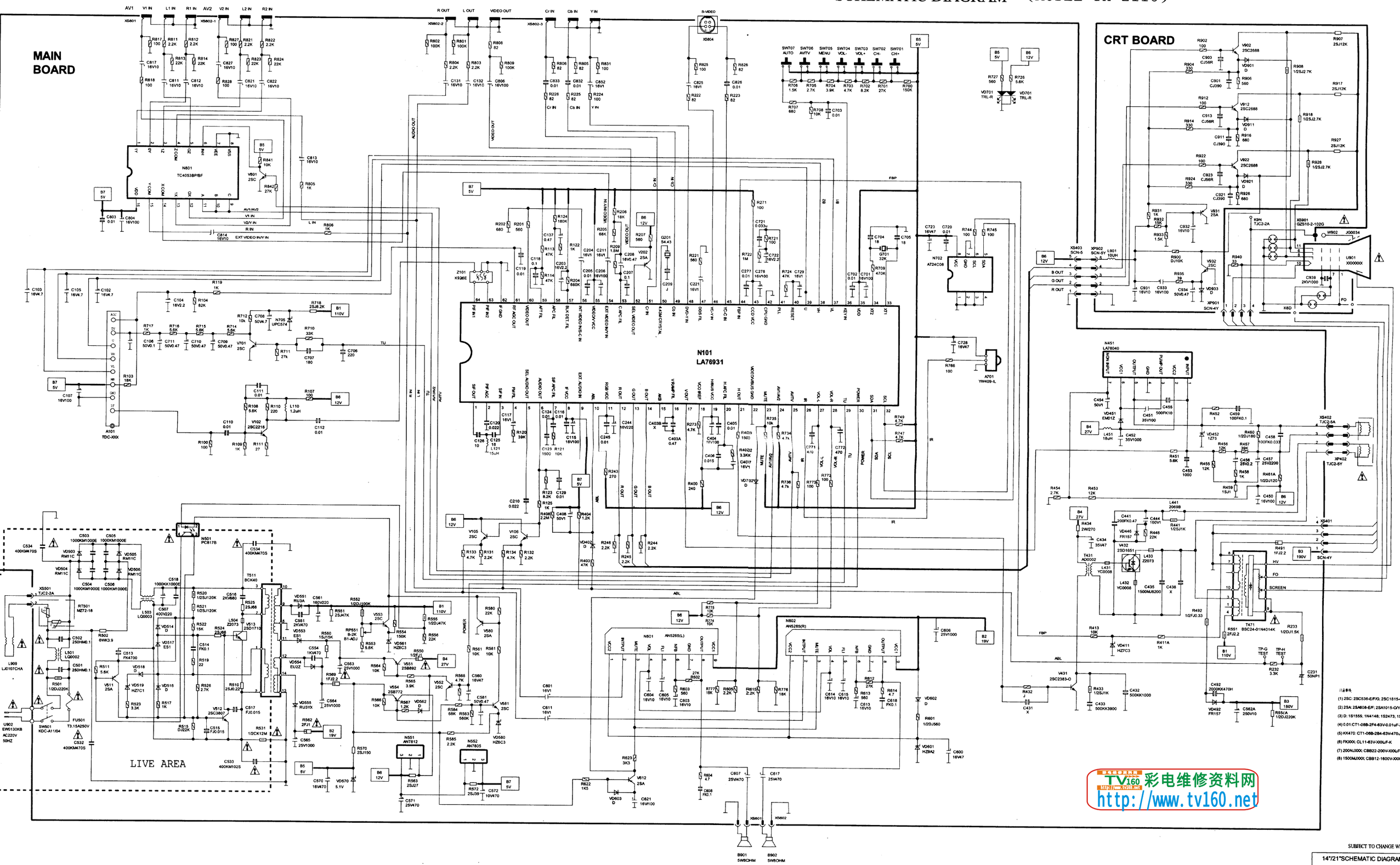

TV160 彩电维修资料网
http://www.tv160.net