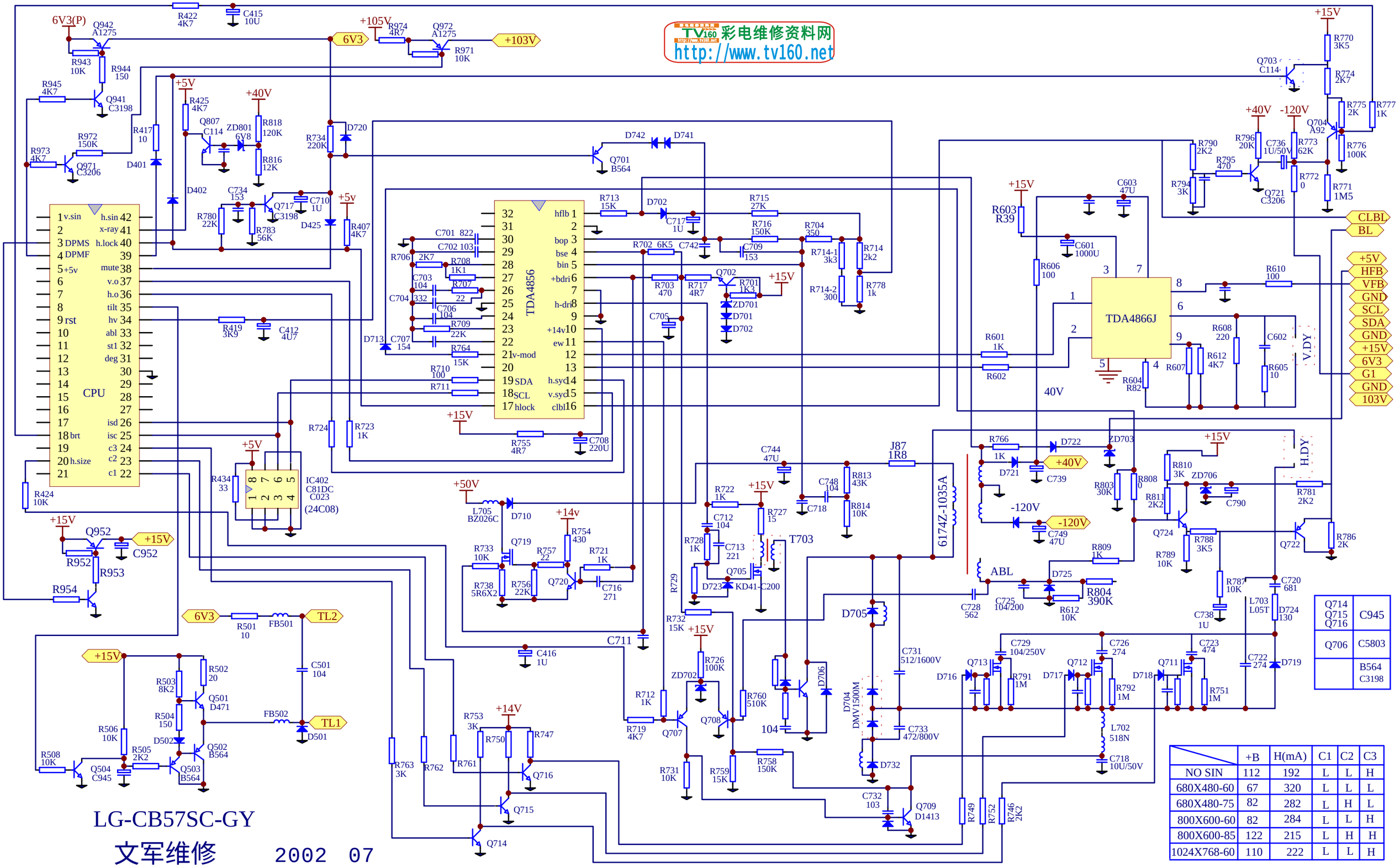


| Q714 Q715 Q716 | C945 |
|---|---|
| Q706 | C5803 |
| | B564 C3198 |

| | +B | H(mA) | C1 | C2 | C3 |
|---|---|---|---|---|---|
| NO SIN | 112 | 192 | L | L | H |
| 680X480-60 | 67 | 320 | L | L | L |
| 680X480-75 | 82 | 282 | L | H | L |
| 800X600-60 | 82 | 284 | L | L | H |
| 800X600-85 | 122 | 215 | L | H | H |
| 1024X768-60 | 110 | 222 | L | L | H |