彩电维修资料网
http://www.tv160.net

P/N : 3854VA0039A
DATE : 98.09.26

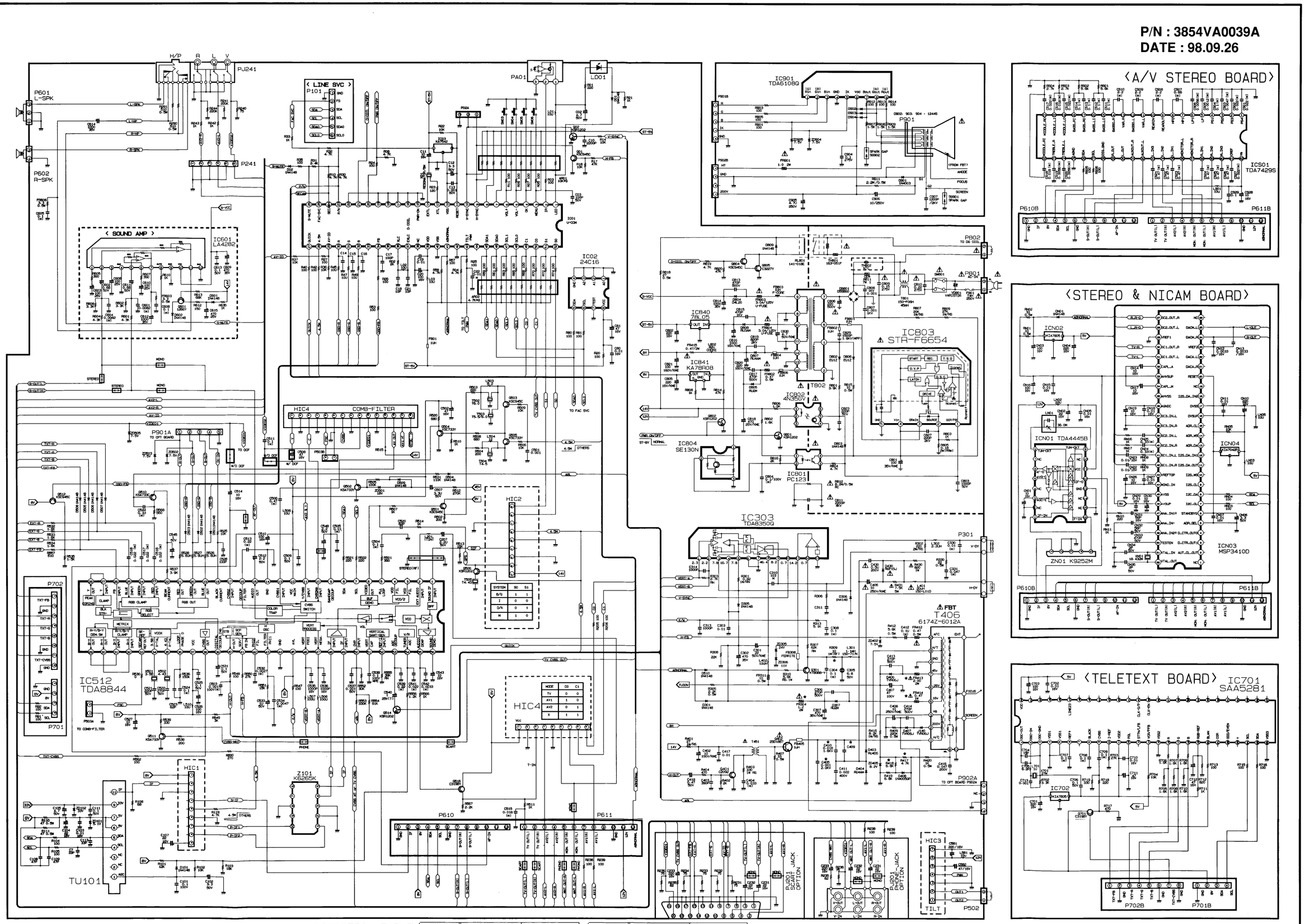

NOTICE

Since this is a basic schematic diagram.
The value of components and some partial connection are subject to be changed for improvement without notice.

The components marked ⚠ confore VDI or IEC guidelines and essential for safe operation of the TV receiver.
While those marked ⚠ are required for correct operation use specified parts only when replacing.

VALUE OF RESISTER· CAPACITOR AND INDUCTOR

1. Resistor is shown in ohm. K=1.000 M=1.000.000
2. Unless otherwise noted in schematic· all capacitor values are expressed in uF.
3. Unless otherwise noted in schematic· all inductor values are expressed in uH.

***OPTION TABLE

CIRT. NO	25INCH	29INCH
L401	25UH	20UH
C430	200V. 624	200V. 504
C409	1600V. 952	
C410	1600V. 123	1600V. 183
C411	400V. 223	400V. 223
C405	1600V. 222	2000V. 102
R417	6. 2K	4. 7K
FR414	2W. 1	1W. 0. 47
FR304	2W. 2	2W. 1. 2

CIRT. NO	25INCH	29INCH
L301	560UH	1. 1MH
R532	1. 5K	1. 6K
R533	1. 5K	1. 6K
R534	1. 5K	1. 6K

MC-8CA

<MC-8CA MODULE & HIC CIRCUIT DIAGRAM>

<TELETEXT BOARD>

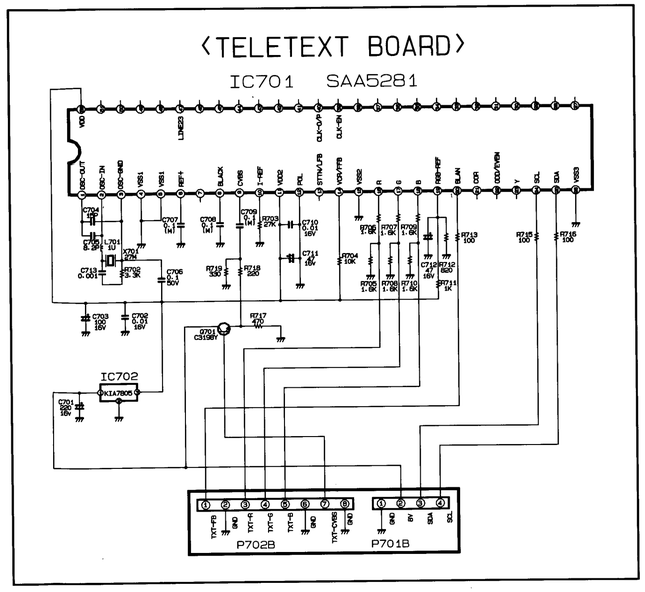

<A/V STEREO BOARD>

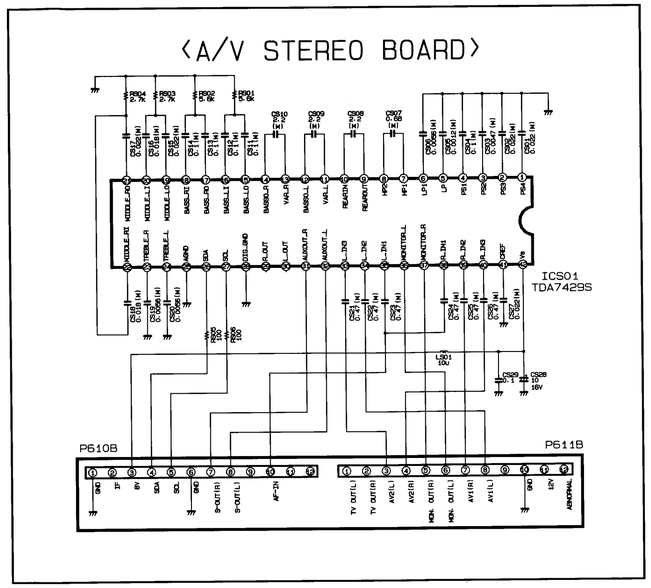

<COMB-FILTER>

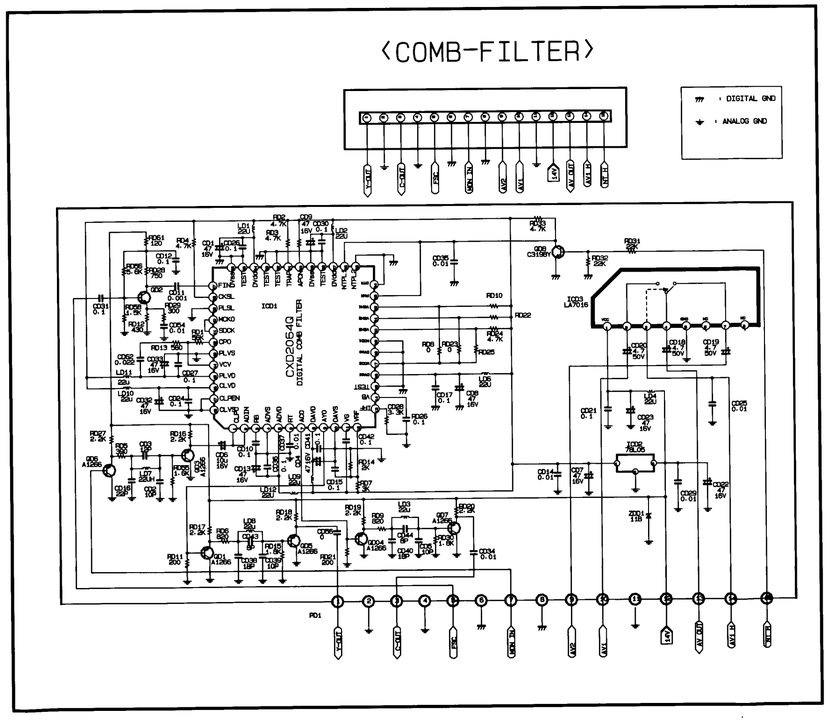
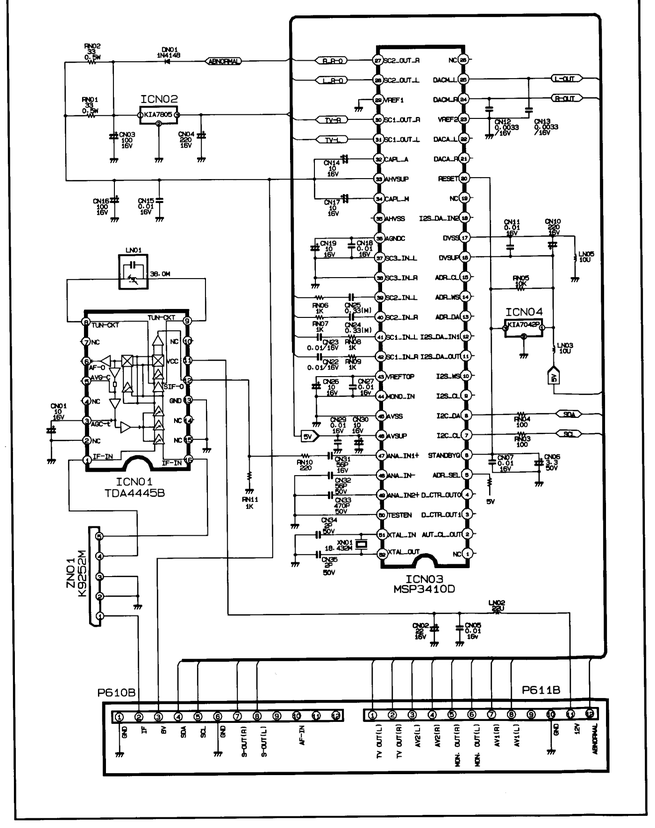
<STEREO & NICAM BOARD>